9924030

STS-46
PRESS INFORMATION

July 1992

Rockwell International
Space Systems Division

Office of External Communications & Media Relations

PUB 3548-V Rev 7-92

CONTENTS

	Page
MISSION OVERVIEW	1
MISSION STATISTICS	5
MISSION OBJECTIVES	9
FLIGHT ACTIVITIES OVERVIEW	11
STS-46 CREW ASSIGNMENTS	13
DEVELOPMENT TEST OBJECTIVES/DETAILED SUPPLEMENTARY OBJECTIVES	17
PAYLOAD CONFIGURATION	19
TETHERED SATELLITE SYSTEM 1	21
EUROPEAN RETRIEVABLE CARRIER 1L	37
EVALUATION OF OXYGEN INTERACTION WITH MATERIALS III/ THERMAL ENERGY MANAGEMENT PROCESSES 2A-3	49
CONSORTIUM FOR MATERIALS DEVELOPMENT IN SPACE COMPLEX AUTONOMOUS PAYLOADS II AND III/LIMITED DURATION SPACE ENVIRONMENT CANDIDATE MATERIALS EXPOSURE	53
PITUITARY GROWTH HORMONE CELL FUNCTION	59
IMAX CARGO BAY CAMERA	61
ULTRAVIOLET PLUME INSTRUMENT	65
DEVELOPMENT TEST OBJECTIVES	67
DETAILED SUPPLEMENTARY OBJECTIVES	69

MISSION OVERVIEW

This is the 12th flight of Atlantis and the 49th for the space shuttle.

The flight crew for the 7-day STS-46 mission is commander Loren J. Shriver; pilot Andrew (Andy) M. Allen; payload commander (lead mission specialist) Jeffrey (Jeff) A. Hoffman; mission specialists Franklin R. Chang-Diaz, Claude Nicollier, and Marsha S. Ivins; and payload specialist Dr. Franco Malerba. The crew will be divided into a blue team, consisting of Nicollier, Allen, and Malerba, and a red team, comprising Ivins, Hoffman, and Chang-Diaz. Shriver is not assigned to a team and is free to adjust his hours real time as necessary. Each team will work consecutive 12-hour shifts, providing for around-the-clock operations.

STS-46 has two primary objectives:

1. To successfully deploy, operate, and retrieve the Tethered Satellite System (TSS) 1, a satellite attached to the orbiter by a superstrong 0.1-inch-diameter electrically conducting tether that will be reeled into space approximately 12.5 miles above Atlantis's payload bay. A joint project of NASA and the Italian Space Agency, TSS-1 is designed to (a) evaluate the capability for safely deploying, controlling, and retrieving a tethered satellite; (b) validate predictions of the dynamic forces at work in a tethered satellite system; (c) conduct exploratory electrodynamic science investigations; and (d) demonstrate the capability of the system to serve as a facility for research in geophysical and space physics.

2. To successfully deploy the European Space Agency's European Retrievable Carrier (EURECA) 1L platform, housing 15 materials sciences, life sciences, and radiobiology experiments. EURECA will remain in orbit and be retrieved during a 1993 shuttle mission.

TSS-1

TSS-1 is the first in a planned series of TSS missions. Tethers such as the one to be demonstrated on STS-46 have numerous potential applications for future space operations, including generating electricity for space station Freedom or other orbiting satellites, use as thrusters to maintain a spacecraft's orbit or to raise or lower a satellite's orbit, and to explore regions of the upper atmosphere that have previously been inaccessible to direct investigation. Lessons learned on STS-46 will be applied to subsequent flights of the TSS and to the development of an advanced system.

TSS-1 consists of three basic elements: the deployer (including the tether), the satellite, and a science complement.

The deployer comprises the structure that supports the satellite during launch and landing; an extendable/retractable deployment boom to initially deploy the satellite; motor and reel assembly to store, deploy, and retrieve the tether that connects the satellite to the deployer; a system for distributing power to the satellite before it is released; and data acquisition and control equipment. A canister in the support structure houses the folded deployment boom and satellite until deployment begins. TSS-1 hardware is carried on two support structures in Atlantis's payload bay: a Spacelab enhanced multiplexer/demultiplexer pallet (EMP) and a mission-peculiar equipment support structure (MPESS).

The TSS tether is a multilayer insulated copper conductor with a stranded Nomex core. It is expected to develop a 5,000-volt electrical potential and carry a maximum current of 1 ampere. When fully deployed, it will create a large current in the Earth's ionosphere,

allowing scientists to measure for the first time the level of charge or electric potential a spacecraft acquires because of its motion through the Earth's magnetic field lines.

The TSS satellite is a 5-foot-diameter sphere weighing 1,139 pounds and is held atop the deployment boom by six latches. It consists of two hemispheres and a propulsion module.

The primary goal of the TSS-1 science activities is to characterize the electrodynamic characteristics of the satellite-tether system. Researchers are particularly interested in how the system interacts with the charged particles and electric and magnetic fields in the ionosphere. The experiments performed on this mission are expected to pave the way for further investigations of naturally occurring phenomena and processes throughout the solar system, including the Earth's magnetosphere.

There are 12 scientific investigations on the TSS-1 mission. Seven of the experiments simulate or monitor the tether system and its environment. In two cases, instruments on the ground will measure electromagnetic emissions from the TSS. Three investigations will seek to support dynamics and electrodynamics theory.

The TSS-1 mission is divided into several distinct phases. During the first, the predeployment quiescent phase, the EMP will be activated, its performance verified, and deployer power turned on.

The predeployment checkout phase marks the actual beginning of the TSS-1 mission. During this phase, the satellite and science equipment will be activated and checked out and the deployment boom extended.

Upon satisfactory checkout of the TSS, flight controllers at the Mission Control Center in Houston will give the Atlantis crew the go-ahead to begin deployment. The nominal planned opportunity for TSS deploy is on orbit 51 with backup opportunities on orbits 52 and 66. At that time, the housing canister will rotate and the boom unfold and extend slowly until it reaches its full 40-foot length. As electric motors on the tether unwind the tether and an electric motor on the end of the boom pulls the tether off the reel, the satellite will begin to slowly pull away from the shuttle at an orbital altitude of 160 nautical miles, reaching its station about 5-1/2 hours later. The gravity gradient between the satellite and the shuttle will provide the force of separation. During the deployment phase, several dynamic functional objective tests will be conducted at varying tether lengths to investigate the control and dynamics of a tethered satellite. Attempts will be made to impart natural disturbances to the tether and correct them while maintaining a constant tension on the tether.

Once the 12.5-mile tether length is reached, the approximately 10-1/2-hour on-station 1 phase begins. During this phase, electrical power generation will be demonstrated and the current-voltage response of the system will be characterized. When the tether is fully extended to its 12.5 mile length, the combination of the orbiter, tether, and satellite will be the longest structure ever flown in space.

Once this phase is completed, the satellite will be slowly retrieved to within 1.5 miles of Atlantis during the retrieve-1 phase, which lasts approximately 7 hours.

When the satellite is about 1.7 miles from Atlantis, the satellite retrieval rate will be slowed to approximately 0.3 meter per second for approximately 4-1/4 hours during the creep phase, which provides time in the retrieval process to carry out any activities necessary to control tether dynamics.

When TSS reaches the 1.5-mile point, the second on-station phase begins, lasting 5 hours. During this phase, science operations will be conducted and final preparations for retrieval will be made. The rate of retrieval will gradually decrease from about 1.5 mph at the start to a closing rate before docking with the deployment boom of 0.1 mph. During this phase, pendulous motion and any residual skip rope motion will be damped.

After the satellite docks, power will be removed from the satellite and deployer. Science activities will be conducted in this phase, called the postretrieval safing phase.

The postretrieval quiescent phase continues until the EMP is deactivated just before deorbit preparations begin.

EURECA 1L

EURECA 1L is a reusable free-flying European Space Agency spacecraft that will be deployed from Atlantis and spend 6 to 9 months in orbit conducting microgravity processing and life science experiments.

The 10,000-pound EURECA payload is scheduled to be deployed by the orbiter's remote manipulator system (RMS) on Flight Day 1 (nominal deploy is on orbit 12; backup deploy opportunities exist on orbits 13 and 28, while contingency deploy opportunities exist on orbits 14-16 and 29-31). Following deployment from Atlantis's payload bay, EURECA's on-board propulsion unit will boost it to an operational altitude of about 270 nautical miles.

The EURECA-1 mission consists of 15 experiments in materials science, life sciences, and radiobiology. Some of the investigations involve protein crystallization, the biological effects of space radiation, measurements of fluids' critical points in microgravity, measurements of solar irradiation, the solar-terrestrial relationship in aeronomy and climatology, and electric propulsion in space. Scientists from Belgium, Germany, Denmark, France, Italy, Great Britain, and The Netherlands will participate in the mission.

The EURECA platform contains an attitude control system, an orbital transfer assembly that permits orbital height and phasing adjustment, and solar panels to provide power.

A shuttle mission in 1993 will rendezvous with the satellite, capture it using the shuttle's RMS, and return it to Earth for experiment evaluation and satellite refurbishment.

EURECA has a five-mission or 10-year lifetime. Future EURECA missions will carry space science payloads in astronomy and solar physics and Earth conservation payloads. The spacecraft can also be used to test interorbit communications, rendezvous, and docking. Much of EURECA's research will be applicable to space station Freedom.

SECONDARY OBJECTIVES

STS-46 secondary objectives include Evaluation of Oxygen Interactions With Materials III/Thermal Energy Management Processes 2A-3 (EOIM-III/TEMP 2A-3), Consortium for Materials Development in Space Complex Autonomous Payloads II and III (CONCAP II/III), Limited Duration Space Environment Candidate Materials Exposure (LDCE), Pituitary Growth Hormone Cell Function (PHCF), IMAX Cargo Bay Camera, and the Ultraviolet Plume Instrument (UVPI).

EOIM-TEMP 2A-3 are independent experiments mounted on the same multipurpose experiment support structure in Atlantis's payload bay.

EOIM-III, sponsored by NASA's Johnson Space Center, is designed to study and quantitatively measure the interaction of spacecraft materials with atomic oxygen, the principal constituent within the low-Earth-orbit environment. The information will be used to provide accurate reaction rate measurements and to determine suitable materials for long-duration space structures, including space station Freedom.

TEMP 2A-3 will test a new cooling method that may be used in future spacecraft, including space station Freedom. A small, mechanically pumped two-phase thermal control system will be tested in both the 1-g and 0-g environments. The system uses the latent heat of vaporization of its ammonia working fluid to transport large amounts of heat over large distances and yet maintain a nearly constant temperature.

The objective of the CONCAP II materials processing experiment is to expose different passive samples of high-temperature

superconducting thin films to the electron volt atomic oxygen flux to achieve improved properties. The experiment will also study the absorption of oxygen as a function of temperature and the effects of oxygen on the surface of various passive samples. The experiment is contained in a getaway special canister mounted in the payload bay.

CONCAP III will determine if a low-gravity threshold exists for the observed phenomenon of gravity-induced structural alteration. If such a threshold exists, this experiment will determine if it is as small as the change in gravity levels resulting from the TSS-1 deployment. The experiment is contained in a getaway special canister mounted in the payload bay.

LDCE's primary objective is to introduce developmental composite materials to a flux of atomic oxygen atoms in low Earth orbit. The candidate materials—polymeric, coated polymeric, and light metallic composite—will have undergone extensive ground-based material performance testing prior to being attached to reusable test fixtures designed for multimission space shuttle use. LDCE is contained in a getaway special canister mounted in the payload bay.

PHCF is designed to determine if the exposure of cultured rat pituitary cells to microgravity affects the capacity to produce biologically or immunologically active growth hormone. It will also permit exploration of these effects as a possible mechanism for muscle atrophy in manned space flight. The experiment is located in Atlantis's crew compartment.

The ICBC is a 70mm color motion picture camera system, consisting of a camera, a 30mm lens, and a film magazine containing approximately 3,850 feet of film, for 10-1/2 minutes of filming. The camera is housed in an insulated pressurized enclosure with a movable lens window cover mounted in the payload bay. The payload is controlled from the aft flight deck with the autonomous payload controller. Subjects to be filmed include EURECA deployment, the TSS-1 deploy and retrieval, and Earth viewing. The footage will be used in future IMAX productions.

UVPI is a Department of Defense payload located on the Low-Power Atmospheric Compensation Experiment satellite, a Strategic Defense Initiative Organization satellite in low Earth orbit. UVPI's sensors will be trained on the orbiter to obtain imagery and/or signature data to calibrate the sensors and to observe orbiter jet firings during cooperative encounters of the orbiter with the LACE satellite.

Eight detailed test objectives and eleven detailed supplementary objectives are scheduled to be flown on STS-46.

MISSION STATISTICS

Vehicle: Atlantis (OV-104), 12th flight

Launch Date/Time:

7/31/92	9:56 a.m., EDT 8:56 a.m., CDT 6:56 a.m., PDT

Launch Site: Kennedy Space Center (KSC), Fla.—Launch Pad 39B

Launch Window: 2 hours, 30 minutes

Mission Duration: 6 days, 22 hours, 9 minutes

Landing: Nominal end-of-mission landing on orbit 111

8/7/92	8:05 a.m., EDT 7:05 a.m., CDT 5:05 a.m., PDT

Runway: Nominal end-of-mission landing on concrete runway 15, Kennedy Space Center, Fla. Weather alternates are Edwards Air Force Base (EAFB), Calif., and Northrup Strip (NOR), White Sands, New Mexico.

Transatlantic Abort Landing: Banjul, Gambia; alternates: Ben Guerir, Morocco; Rota, Spain

Return to Launch Site: KSC

Abort-Once-Around: EAFB; alternates: KSC and NOR

Inclination: 28.45 degrees

Ascent: The ascent profile for this mission is a direct insertion. Only one orbital maneuvering system thrusting maneuver, referred to as OMS-2, is used to achieve insertion into orbit. This direct-insertion profile lofts the trajectory to provide the earliest opportunity for orbit in the event of a problem with a space shuttle main engine.

The OMS-1 thrusting maneuver after main engine cutoff plus approximately 2 minutes is eliminated in this direct-insertion ascent profile. The OMS-1 thrusting maneuver is replaced by a 5-foot-per-second reaction control system maneuver to facilitate the main propulsion system propellant dump.

Altitude: 230 nautical miles (265 statute miles) circular orbit (EURECA deploy); 160 nautical miles (184 statute miles) circular orbit (TSS operations); 128 nautical miles (147 statute miles) circular orbit (EOIM operations)

Space Shuttle Main Engine Thrust Level During Ascent: 104 percent

Space Shuttle Main Engine Locations:

No. 1 position: Engine 2032
No. 2 position: Engine 2033
No. 3 position: Engine 2027

External Tank: ET-48

Solid Rocket Boosters: BI-052

Editor's Note: The following weight data are current as of July 21, 1992.

Total Lift-off Weight: Approximately 4,516,789 pounds

Orbiter Weight, including Cargo, at Lift-off: Approximately 256,031 pounds

Orbiter (Atlantis) Empty, and 3 SSMEs: Approximately 171,994 pounds

Payload Weight Up: Approximately 28,585 pounds

Payload Weight Down: Approximately 18,594 pounds

Orbiter Weight at Landing: Approximately 208,806 pounds

Payloads—Payload Bay (* denotes primary payloads): Tethered Satellite System 1,* European Retrievable Carrier 1L,* Evaluation of Oxygen Integration With Materials III/Thermal Management Processes 2A, Consortium for Materials Development in Space Complex Autonomous Payloads II and III, IMAX Cargo Bay Camera, Limited Duration Space Environment Candidate Materials Exposure

Payloads—Middeck: Pituitary Growth Hormone Cell Function

Other Mission Objective—No Flight Hardware: Ultraviolet Plume instrument (UVPI)

Flight Crew Members:

Commander: Loren J. Shriver, third space shuttle flight

Red Team:
Mission Specialist 2: Marsha S. Ivins, second space shuttle flight
Payload Commander (MS 3): Jeffrey (Jeff) A. Hoffman, third space shuttle flight
Mission Specialist 4: Franklin R. Chang-Diaz, third space shuttle flight

Blue Team:
Pilot: Andrew (Andy) M. Allen, first space shuttle flight
Mission Specialist 1: Claude Nicollier, European Space Agency, first space shuttle flight
Payload Specialist 1: Dr. Franco Malerba, Italy, first space shuttle flight

Ascent Seating:

Flight deck, front left seat, commander Loren J. Shriver
Flight deck, front right seat, pilot Andrew M. Allen
Flight deck, aft center seat, mission specialist Marsha S. Ivins
Flight deck, aft right seat, mission specialist Claude Nicollier
Middeck, payload commander Jeffrey A. Hoffman
Middeck, mission specialist Franklin R. Chang-Diaz
Middeck, payload specialist Dr. Franco Malerba

Descent Seating:

Flight deck, front left seat, commander Loren J. Shriver
Flight deck, front right seat, pilot Andrew M. Allen
Flight deck, aft center seat, mission specialist Marsha S. Ivins
Flight deck, aft right seat, mission specialist Claude Nicollier
Middeck, payload commander Jeffrey A. Hoffman
Middeck, mission specialist Franklin R. Chang-Diaz
Middeck, payload specialist Dr. Franco Malerba

Extravehicular Activity Crew Members, if Required:

Extravehicular (EV) astronaut 1: Jeffrey A. Hoffman
EV-2: Franklin R. Chang-Diaz

Intravehicular Astronaut: Marsha S. Ivins

STS-46 Flight Directors:

Ascent, Entry, Orbit 1: Ron Dittemore
Orbit 2: Chuck Shaw

Orbit 3: Jeff Bantle

Entry: Automatic mode until subsonic, then control stick steering

Notes:

- The remote manipulator system is installed in Atlantis's payload bay for this mission
- The galley is installed in Atlantis's middeck
- Unscheduled EVAs could be conducted in the event of any of the following payload contingencies: manual TSS ROEU umbilical mate/demate, manual tether cut, manual boom jettison, manual payload latch/reel lock, manual EURECA antenna boom separation and solar array retraction
- Following this flight and removal of the TSS payload at KSC, Atlantis will be towed to the vehicle assembly building for a few weeks until an OPF bay becomes available. This fall, Atlantis will be readied for ferry flight to Rockwell International's Space Systems Division facility in Palmdale, Calif. The orbiter is scheduled to undergo a complete structural inspection and extensive modifications, including changes to accommodate a 16-day extended duration mission capability, during late 1992 and early 1993. Atlantis's next scheduled flight is STS-57, the first flight of the Spacehab payload, which will also retrieve the EURECA payload deployed on this mission. Launch is currently projected for June 1993.

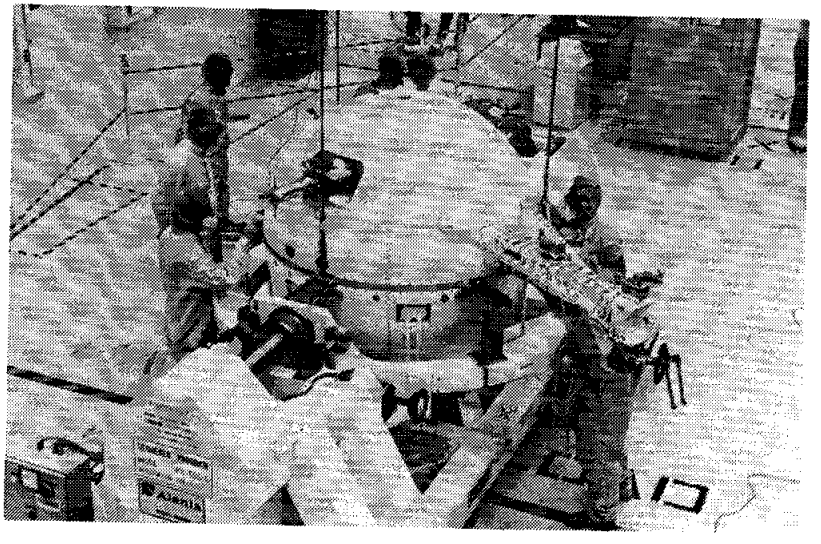

Workers Check Out TSS Satellite at KSC. Satellite's Fixed Boom Is Visible on Right Side.

MISSION OBJECTIVES

- Primary objectives
  - — Tethered Satellite System (TSS) 1 deploy and retrieval
  - — European Retrievable Carrier (EURECA) 1L deploy
- Secondary objectives
  - — Middeck
    - Pituitary Growth Hormone Cell Function (PHCF)
  - — Payload bay
    - Evaluation of Oxygen Integration WIth Materials (EOIM) III/Thermal Management Processes (TEMP) 2A-3
    - Consortium for Materials Development in Space Complex Autonomous Payloads (CONCAP) II/III
    - IMAX Cargo Bay Camera (ICBC)
    - Limited Duration Space Environment Candidate Materials Exposure (LDCE)
- Ultraviolet Plume Instrument (payload of opportunity—no flight hardware)
- Development test objectives/detailed supplementary objectives

FLIGHT ACTIVITIES OVERVIEW

Flight Day 1

Launch
OMS-2
Unstow cabin
EURECA activation and checkout
TSS activation
RMS checkout
TSS deployer checkout
EURECA in-bay operations
EURECA RMS grapple
EURECA unberth
EOIM/TEMP-2A activation

Flight Day 2

EURECA solar array deploy
EURECA antenna deploy
EURECA deploy
EURECA separation burn
EURECA stationkeeping
EURECA orbital transfer maneuvers
Checkout
TEMP-2A operations
Tether optical phenomenon (TOP) checkout
Supply water dump nozzle DTO
OMS-3 burn
OMS-4 burn (160 x 160 nautical miles)

Flight Day 3

TOP checkout
TEMP-2A operations
Priority Group B powerdown
TSS checkout/in-bay operations
PRCS firing
Orbiter rotation

Flight Day 4

TSS in-bay operations
Priority Group B powerup
Unlatch TSS satellite
TSS deployer/retriever boom (DRB) extension
TSS deploy
Initiate TSS satellite spin
TSS satellite despin
TEMP-2A operations
TSS on station 1 (12.5 miles)
PRCS firing observation
Orbiter rotations (2)

Flight Day 5

PRCS firings observation (tail only)
Orbiter rotation
Terminate satellite spin
DRB retraction
PRCS firings observation
TSS retrieval to 1.5 miles
DRB deploy
Initiate satellite spin
Terminate satellite spin
DRB retract
TSS final retrieval
TSS dock

Flight Day 6

TSS boom retract
TSS safing
TSS in-bay operations
RCS firing
Terminate TSS operations
OMS-5 burn
OMS-6 burn (128 x 128 nautical miles)
EOIM/TEMP-2A operations
TSS deactivation

Flight Day 7

TSS science deactivation
EOIM/TEMP-2A operations
RCS hot-fire test
FCS checkout

Flight Day 8

Cabin stow
Deorbit preparation
Deorbit burn
Landing

Notes:

- Each flight day includes a number of scheduled housekeeping activities. These include inertial measurement unit alignment, supply water dumps (as required), waste water dumps (as required), fuel cell purge, Ku-band antenna cable repositioning, and a daily private medical conference.

STS-46 CREW ASSIGNMENTS

*Denotes primary responsibility

Commander (Loren J. Shriver):

Overall mission decisions
Orbiter—rendezvous/proximity operations,* crew equipment, flight data file, DPS,* ECLSS,* GN&C/trajectory,* MPS,* OMS/RCS,* ascent checklist,* postinsertion checklist,* flight plan,* entry checklist*
DTOs/DSOs—DTO subject 1; DSOs 614 and 618; neurological exam
Other—medical officer, flight rules,* crew report,* postflight press conference, OI-21,* training*

Pilot (Andrew M. Allen):

Orbiter—rendezvous/proximity operations, IFM,* photo/TV equipment, flight data file,* APU/hydraulics, caution and warning, DPS, ECLSS, EPS, GN&C/trajectory, MPS, OMS/RCS, general upkeep of flight data file books,* ascent procedure list,* orbiter operations checklist,* orbit procedure list,* deorbit preparation checklist,* entry procedure list,* reference data,* system data*
Payload—PDRS, EURECA, ICBC, maps/charts*
DTOs/DSOs—DTO subject 2; DSOs 613 and 618; neurological exam
Other—Earth observations, flight rules, crew report, postflight press conference, flight movie, OI-21, training

Payload Commander (MS 3) (Jeffrey A. Hoffman):

Orbiter—crew equipment, photo/TV equipment, photo/TV science,* SPOC/HP, PGSC, flight data file, CCTV,* flight plan, photo/TV checklist, EVA checklist*
Payload—EURECA, TSS operations,* TSS science, TSS dynamics,* EOIM/TEMP, payload operations, payload systems, payload malfunctions
DTOs/DSOs—DSOs 603B, 604, 614, and 621; neurological exam
Other—extravehicular astronaut,* medical officer, flight rules, crew report, postflight press conference, flight movie, training

Mission Specialist 1 (Claude Nicollier):

Orbiter—rendezvous/proximity operations, SPOC/HP/PGSC, CCTV, communications instrumentation/TAGS/audio, mechanical, PDRS, flight plan, PDRS checklist,* medical checklist,* payload operations,* payload systems, payload malfunctions
Payload—PDRS,* EURECA,* TSS operations, TSS dynamics, EOIM/TEMP, IFM, photo/TV science*
DTOs/DSOs—DSOs 614 and 621; neurological exam
Other—secondary, medical officer, Earth observations, crew report, postflight press conference

Mission Specialist 2 (Marsha S. Ivins):

Orbiter—IFM, crew equipment,* photo/TV equipment,* APU/hydraulics,* communications/instrumentation/TAGS/audio,* caution and warning,* EPS,* mechanical,* ascent/entry systems procedures,* cue cards,* contingency deorbit,* malfunction,* photo/TV checklist,* EVA checklist, contingency EVA checklist, DPS dictionary*
Payload—PDRS, rendezvous/proximity operations, ICBC*
DTOs/DSOs—DTO subject 3; DSOs 614 and 621; neurological exam

Other—intravehicular astronaut, secondaries,* Earth observations,* crew report, postflight press conference, flight movie,* OI-21

Mission Specialist 4 (Franklin R. Chang-Diaz):

Orbiter—IFM, photo/TV science, SPOC/HP/PGSC,* contingency EVA checklist*
Payload—PDRS, TSS operations, TSS science,* TSS dynamics checklist, EOIM/TEMP,* payload operations checklist, payload systems checklist,* payload malfunctions checklist*
DTOs/DSOs—DSOs 603B, 604 (I), 613, and 618; neurological exam
Other—extravehicular astronaut, Earth observations, crew report, postflight press conference, flight movie

Payload Specialist 1 (Franco Malerba):

Orbiter—photo/TV science, SPOC/HP/PGSC, flight data file
Payload—EURECA, TSS operations, TSS science, TSS dynamics checklist, EOIM/TEMP, payload operations checklist, payload systems checklist, payload malfunction checklist
DTOs/DSOs—DSOs 603B and 621; neurological exam
Other—Earth observations, crew report, postflight press conference

STS-46 crew members are (standing, from left) mission specialists Marsha S. Ivins and Claude Nicollier, who is representing the European Space Agency; payload commander Jeffrey A. Hoffman; mission specialist Franklin R. Chang-Diaz; and Franco Malerba, representing the Italian Space Agency. Mission commander is Loren J. Shriver (right front) and the pilot is Andrew M. Allen (left front).

DEVELOPMENT TEST OBJECTIVES/DETAILED SUPPLEMENTARY OBJECTIVES

DTOs

- Entry aerodynamic control surfaces test—alternate elevon schedule, part 2 (DTO 251)
- Entry structural capability evaluation (DTO 307D)
- Waste and supply water dumps (DTO 325)
- Payload and general-purpose computer (PGSC) single-event upset monitoring (DTO 656)
- Acoustical noise dosimeter data (DTO 663)
- Modify ECLSS supply air ducting to provide chilled air to suited crew members (DTO 666)
- Laser range and range rate device (DTO 700-2)
- Crosswind landing performance (DTO 805)

DSOs

- Assessment of circadian shifting by bright light in astronauts (DSO 484)
- Orthostatic function during entry, landing, and egress (DSO 603B)
- Visual vestibular integration as a function of adaptation (investigation OI-1) (DSO 604)
- Changes in the endocrine regulation of orthostatic tolerance during space flight (DSO 613)
- The effect of prolonged space flight on head and gaze stability during locomotion (DSO 614)
- Effects of intense exercise during space flight on aerobic capacity and orthostatic function (DSO 618)
- In-flight use of Florinef to improve orthostatic intolerance after flight (DSO 621)
- Educational activities, objective 1 (DSO 802)
- Documentary television (DSO 901)
- Documentary motion picture photography (DSO 902)
- Documentary still photography (DSO 903)

PAYLOAD CONFIGURATION

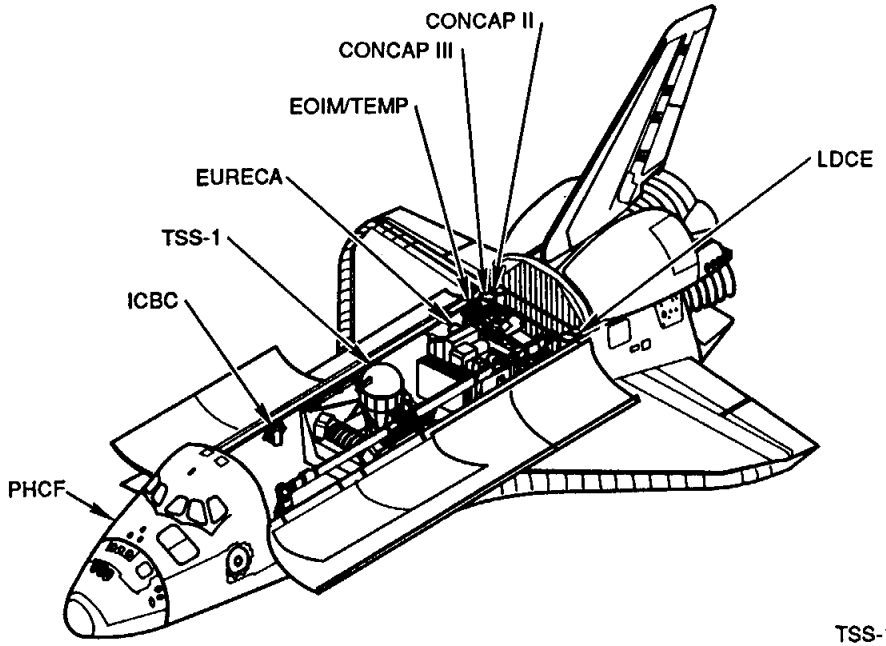

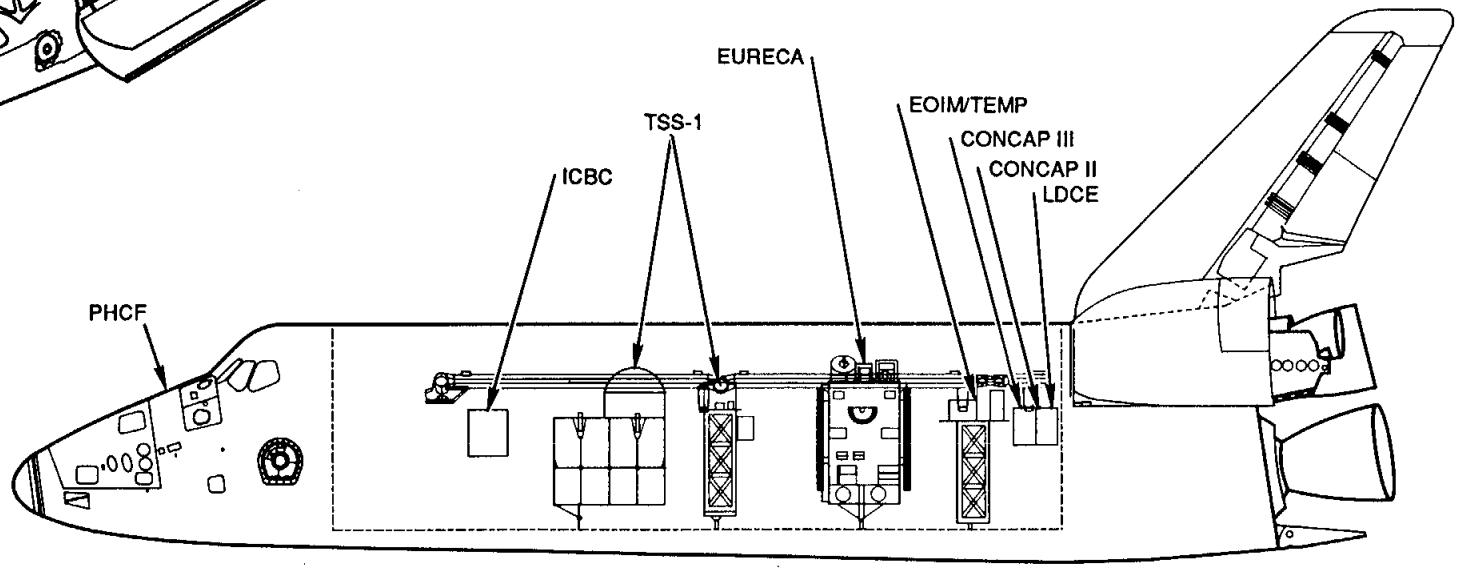

MTD 920722-3700

TETHERED SATELLITE SYSTEM (TSS-1)

The crew of space shuttle Atlantis will deploy the longest structure ever flown in space on this mission—a 1,139-pound satellite attached to the orbiter by a 13.7-mile-long electrically conducting cord—to study the feasibility of tethered satellites and perform other experiments.

The TSS-1 mission will test the ability to deploy a tethered satellite from the shuttle's payload bay, maintain the satellite on station, and retrieve and replace it in the shuttle. A second objective of the mission is to study the electrodynamic effects associated with the movement of an electrically conductive tether through the Earth's magnetic field.

The idea of space-based tethers has been studied theoretically for decades. Small 100-foot tethers were flown aboard Gemini 11 and 12 in 1966. A shuttle-based tether system was first proposed in the early 1970s by Italian scientist Dr. Mario Grossi, and Professor Guiseppe Colombo of the University of Padua, Italy, proved the feasibility of the concept and suggested uses. In 1984, NASA and the Italian Space Agency (ASI) agreed to jointly define and develop a tethered satellite system that would be flown on the space shuttle.

TSS-1 is the first in a planned series of missions to test the concept. Lessons learned on STS-46 will be applied to subsequent flights of the TSS and to the development of an advanced system.

Conducting tethers may be used to generate electricity for the space station or other orbiting satellites. Tethers may also be used as thrusters to maintain a spacecraft's orbit or to raise or lower a satellite's orbit.

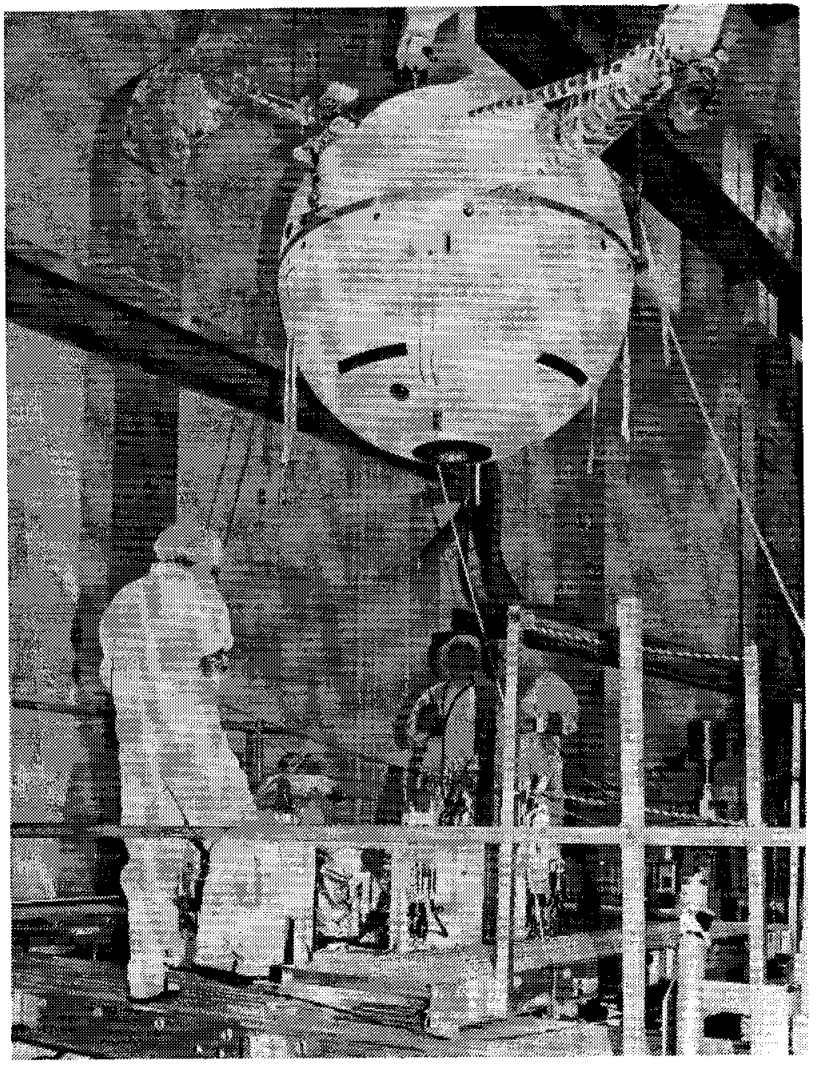

TSS Satellite Is About To Be Mated to Satellite Support Assembly in Operations and Checkout Building at KSC

TSS HARDWARE

TSS-1 consists of three basic elements: the deployer (which includes the tether), the satellite, and a science complement. NASA is supplying the deployer system and tether and ASI, the satellite. The science instruments were developed by various U.S. and Italian government agencies, universities, and companies.

TSS-1 hardware is carried on two support structures in Atlantis's payload bay. The deployer hardware and avionics subsystems are mounted on a Spacelab enhanced multiplexer/demultiplexer pallet (EMP) in the payload bay. The EMP also provides electrical power to the deployer, command and data transmission, and cooling. The science support equipment for TSS-1 and two science experiments are mounted on an inverted A-frame structure known as the mission-peculiar equipment support structure (MPESS), which is located immediately behind the EMP.

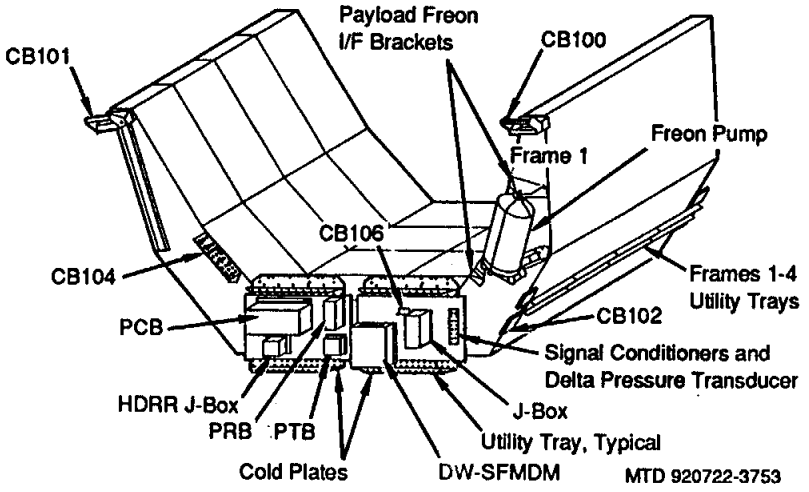

EMP Overview

The deployer comprises the structure that supports the satellite, the deployment boom, the tether reel, a system for distributing power to the satellite before it is released, and a data acquisition and control assembly.

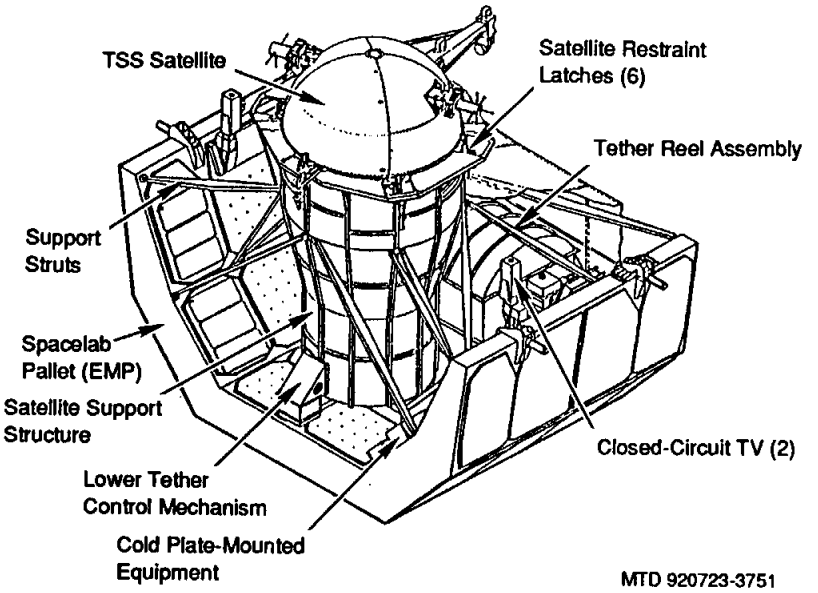

EMP/Deployer

A canister in the support structure houses the folded deployment boom and satellite until deployment begins. At that time, the canister rotates and the boom unfolds and extends slowly until it reaches its full 40-foot length.

The tether reel is designed to hold 68 miles of tether. It regulates the length, tension, and rate of deployment of the tether—all critical factors in controlling the tether. The reel can let the tether out at about 10 miles per hour, but the rate will be much slower on this mission.

The tether used on this mission is 13.7 miles long and only 0.1 inch in diameter, about the thickness of a bootlace. It is a multilayer insulated copper conductor with a stranded Nomex core. The conductor is a 10-strand, 34-AWG, tin-coated copper bundle wrapped

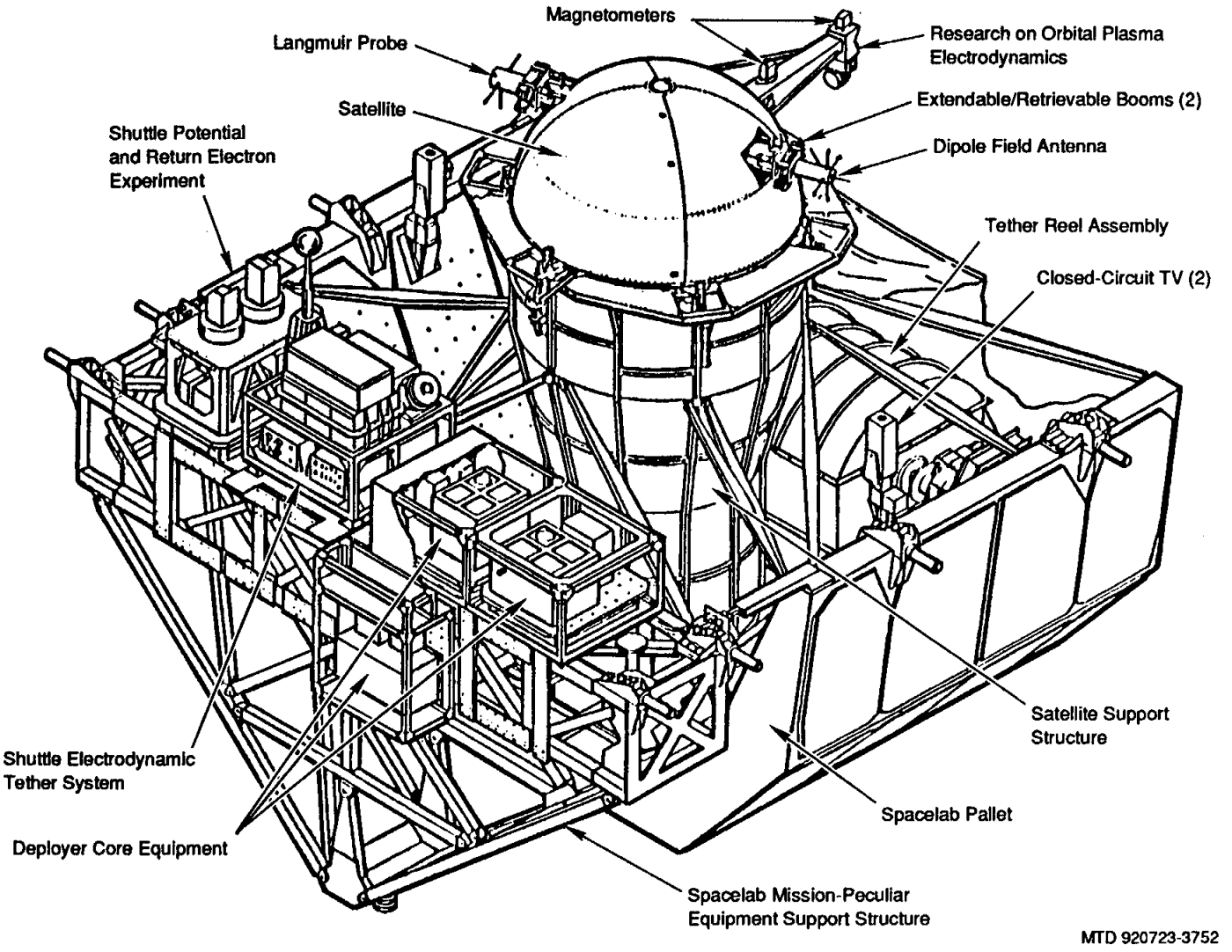

EMP/Deployer Launch Configuration (MLI Not Shown)

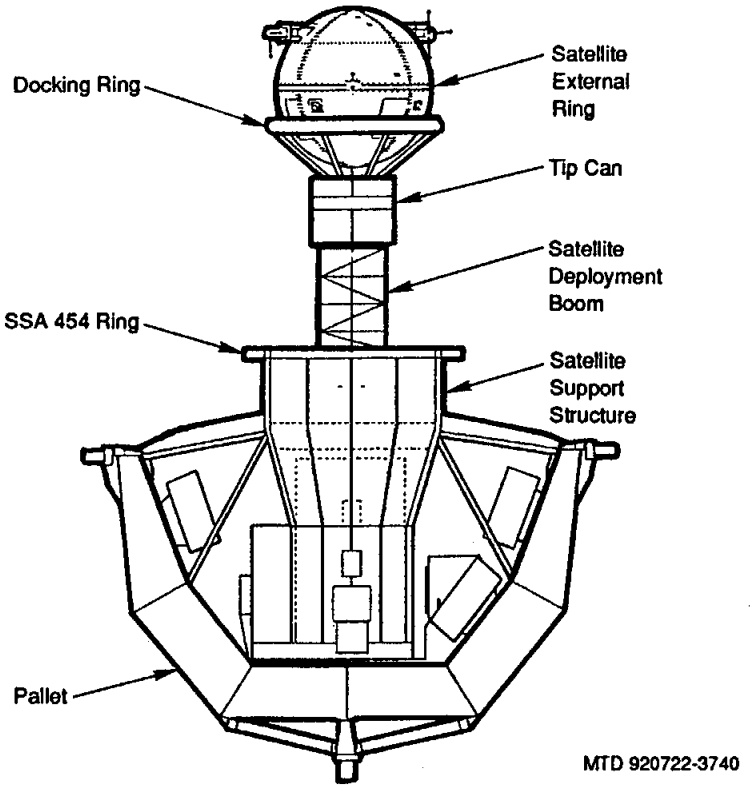

Satellite/Deployer Interface

around the Nomex core. An extruded Teflon coating provides insulation for the conductor. A layer of braided Kevlar—a tough, light synthetic fiber used in bulletproof vests—gives strength to the tether, and a final braid of Nomex protects it from atomic oxygen. The tether is expected to develop a 5,000-volt electrical potential and carry a maximum current of 1 ampere.

When fully deployed (about 12.5 miles), the tether will create a large current in the Earth's ionosphere like the natural currents that occur in the Earth's polar regions and which are associated with aurora borealis. It will also be the longest and lowest frequency antenna ever placed in orbit. The tether will allow scientists to

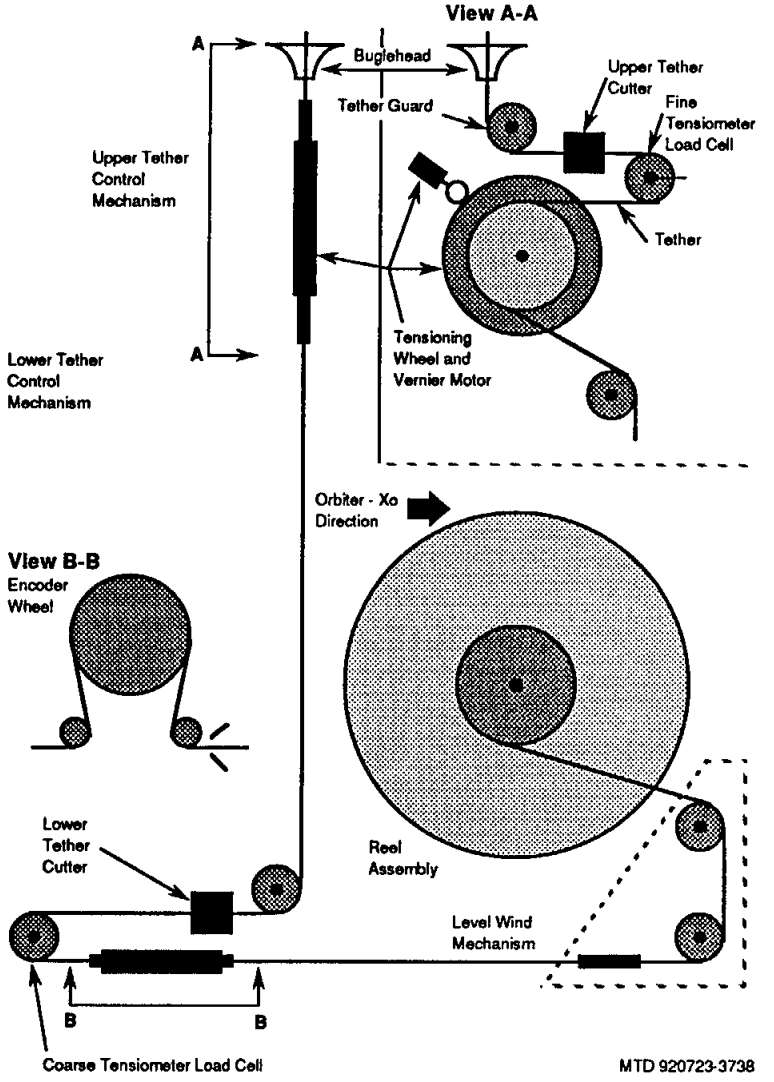

Tether Control Mechanisms

measure for the first time the level of charge or electric potential a spacecraft acquires because of its motion through the Earth's magnetic field lines.

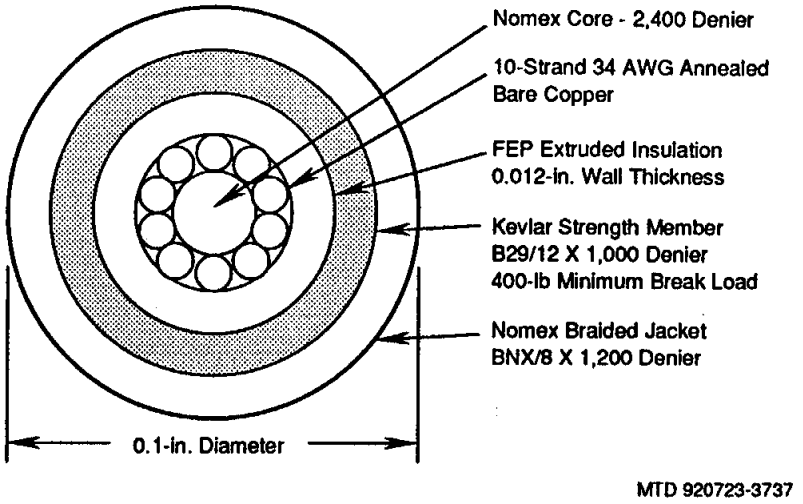

Tether

The Italian Space Agency satellite is a 5-foot sphere that is held atop the deployment boom by six latches. The satellite consists of two hemispheres and a propulsion module. The upper hemisphere is the payload module, which houses science instruments. The lower hemisphere contains support systems for power distribution, data handling, telemetry, and navigational equipment.

The satellite has three booms for scientific instruments that sample the surrounding environment. A 39-inch-long fixed boom is located at the middle of the sphere. Two additional booms on opposite sides of the payload module can be extended up to 8 feet and retracted into the payload module when the satellite is reeled back to the orbiter. The satellite also has an S-band antenna mounted on a short mast opposite the fixed boom.

An auxiliary propulsion module controls the satellite's attitude and spin rate. The satellite has three sets of thrusters. One set located near the tether attachment places extra tension on the tether, another set reduces or eliminates pendulum-type motions in the satellite, and the third spins the satellite or stops it from spinning. Gaseous nitrogen fuel for the thrusters is supplied from a pressurized tank in the center of the satellite.

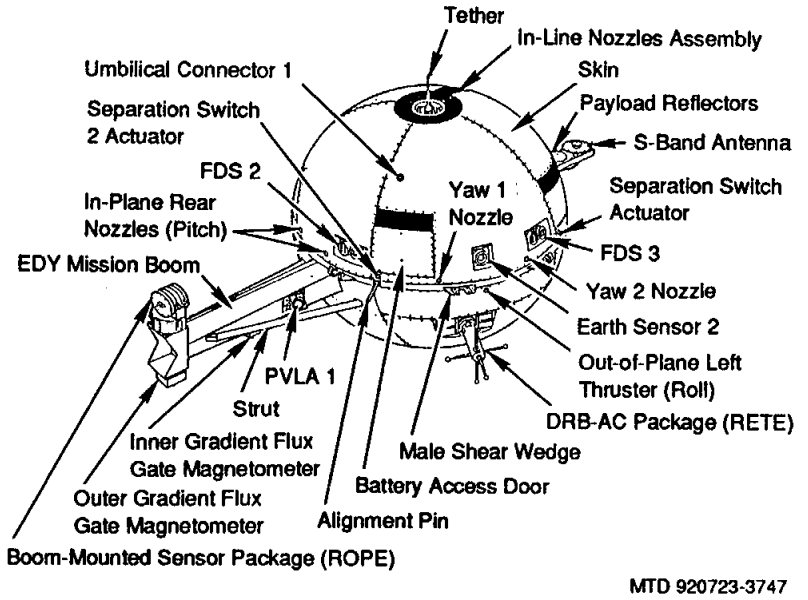

Tethered Satellite System

DEPLOYMENT

The satellite will be deployed from the shuttle at an altitude of 160 nautical miles while Atlantis is oriented with its payload bay facing away from Earth, its tail slanted upward, and its nose pitched down. During the first phase of the mission, the predeployment quiescent phase, the EMP will be activated and its performance verified. Deployer power will be turned on during this phase.

The predeployment checkout phase marks the actual beginning of the TSS-1 mission. During this phase, the satellite and science equipment will be activated and checked out. The deployment boom will be extended to its 40-foot length to provide clearance between the orbiter and satellite during deployment and retrieval. Before the satellite is released, noise induced in the extended boom by firings

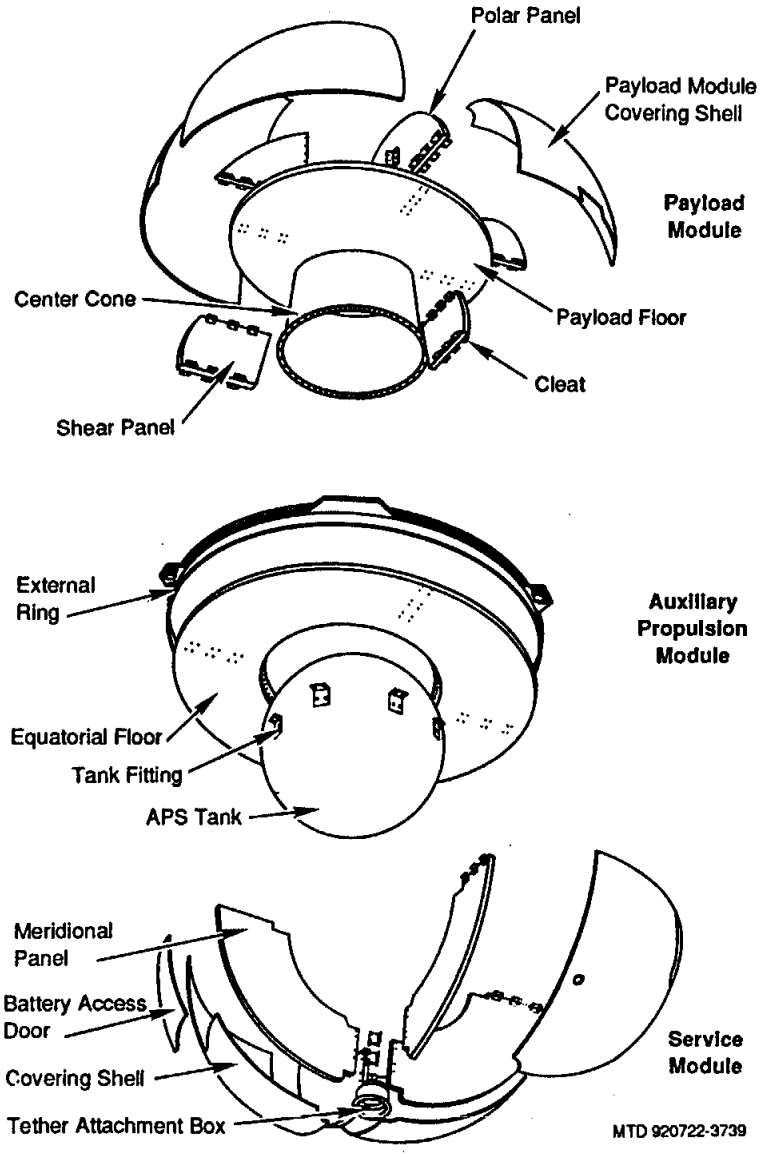

Satellite Exploded View

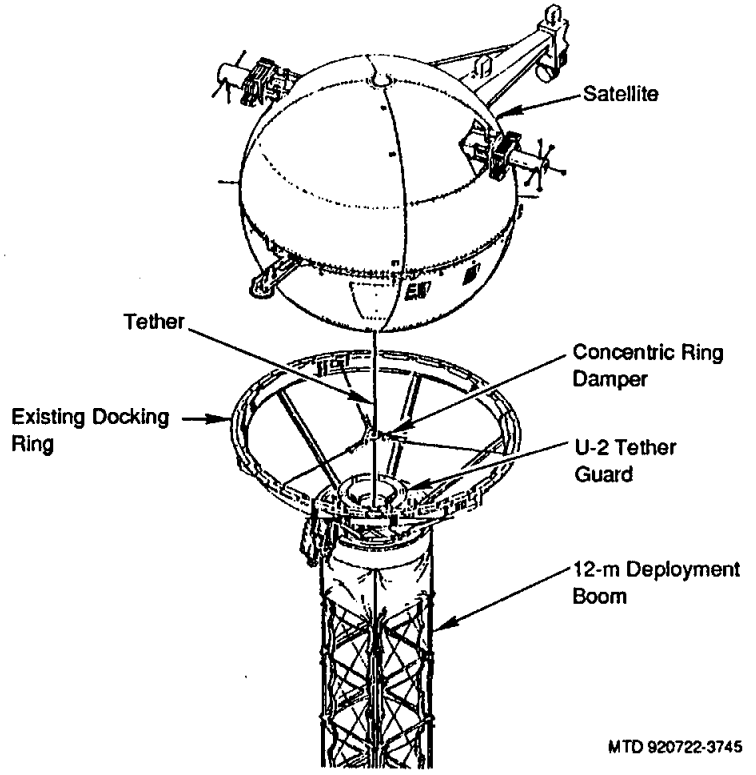

Satellite Upper Boom

of the shuttle's translation jets will be baselined (a rate of 0.1 meter per second is desired).

After all of the TSS communication links have been checked out, flight controllers at the Mission Control Center in Houston will give the Atlantis crew the go-ahead to begin deployment. The crew will then configure the deployer reel brake logic and command satellite flyaway. This involves firing the satellite's in-line thrusters and commanding the data acquisition and control assembly to deploy the satellite.

As electric motors on the tether unwind the tether and an electric motor on the end of the boom pulls the tether off of the reel, the

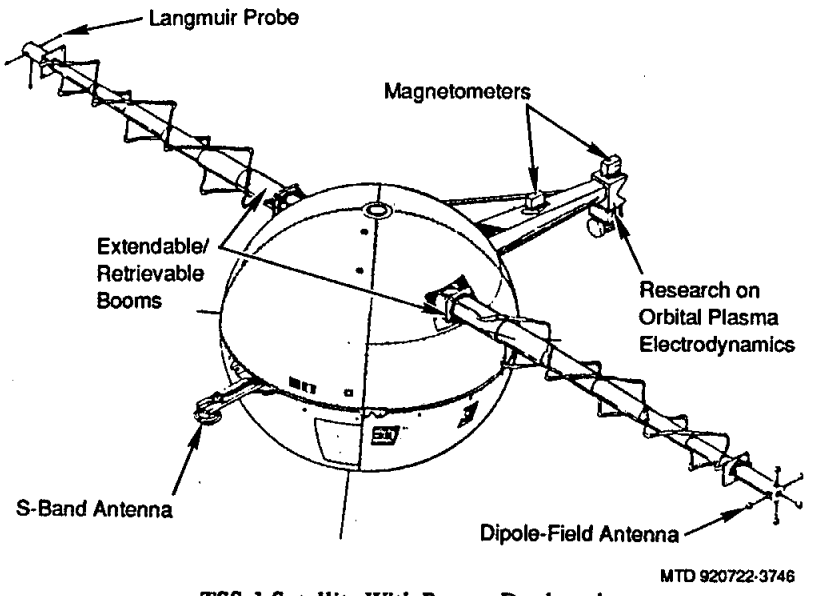

TSS-1 Satellite With Booms Deployed

satellite will begin to pull slowly away from the shuttle under its own power. When the deployed satellite is 80 feet from the shuttle, the crew will begin to track it with the shuttle's rendezvous radar.

Initially, the satellite will be traveling 0.02 mph. Its speed will continue to increase until it reaches almost 4 mph 1-1/2 hours after deployment. About a mile from Atlantis, the satellite's rate of deployment will slow briefly so that the satellite will be in the same plane as Atlantis and almost directly overhead by the time 3 miles of tether have been unwound.

When the satellite is 3.7 miles from the orbiter about 2-1/2 hours after deployment, its attitude control thrusters will be fired, imparting a 0.25-rpm spin to the satellite. This slight spin is necessary for performing science experiments on board the satellite. The spin will continue until the satellite is 30 minutes from reaching its planned station 12.5 miles from Atlantis.

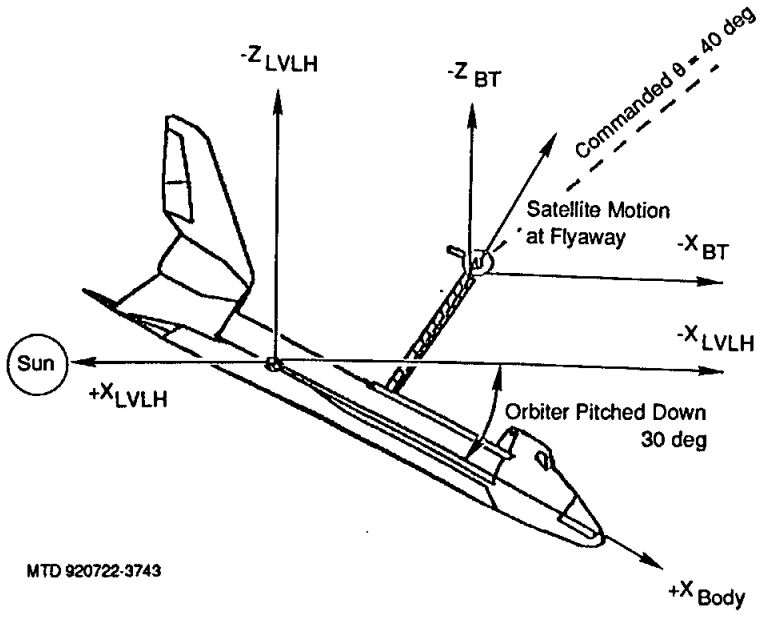

Deployment Geometry

After the attitude control thruster firing, the satellite will again pick up speed, reaching almost 5 mph about 4 hours into the deployment phase. From this point, the rate at which the tether is fed out will gradually decrease and stop when the satellite reaches its station about 5-1/2 hours after deployment.

Just before the satellite arrives on station, its 0.25-rpm spin will be stopped so that tether dynamics can be measured. Then a 0.7-rpm spin will be imparted to the satellite.

When the satellite is fully deployed, it is expected to exert a pull on the tether equivalent to about 10 pounds of force.

During the deployment phase, several dynamic functional objective tests will be conducted at varying tether lengths to investigate the control and dynamics of a tethered satellite. Researchers

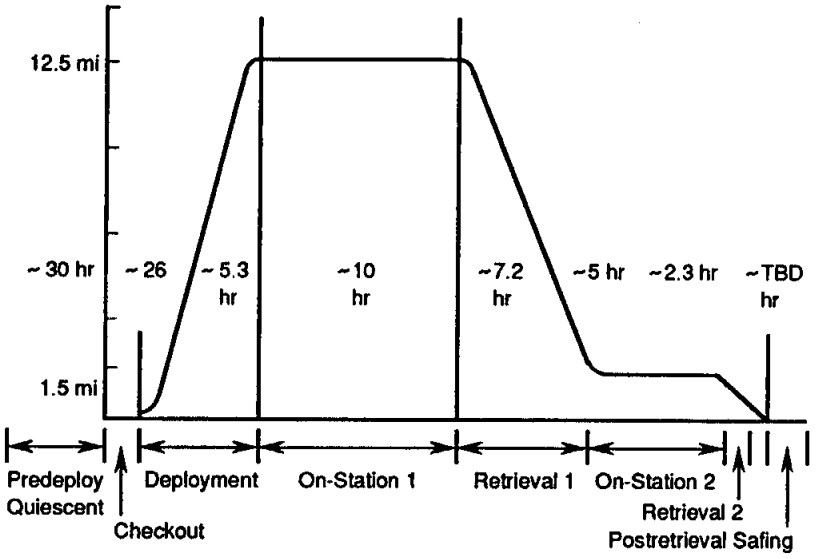

STS-46 TSS-1 Mission Profile MTD 920723-3749

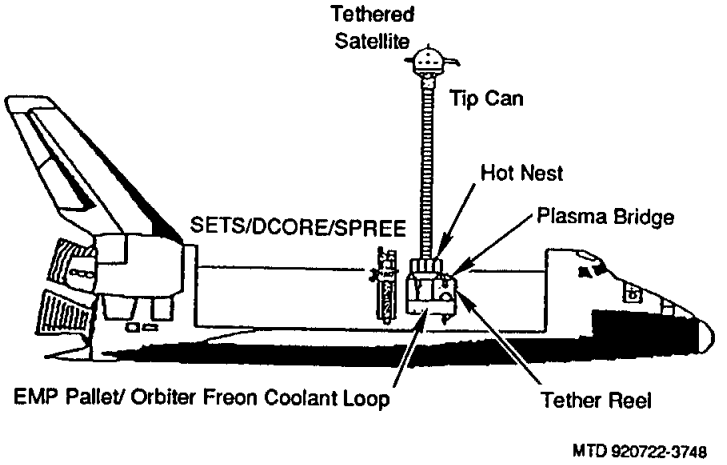

TSS Predeployment Configuration

also expect that these test results will be helpful as they prepare to retrieve the satellite and will verify whether the satellite can be controlled during the retrieval operation. According to deployment models, a tethered satellite system becomes more stable the longer the tether becomes. Conversely, the system is expected to become less stable as the tether is shortened during retrieval.

In the dynamics tests, attempts will be made to impart natural disturbances to the tether and correct them while maintaining a constant tension on the tether. One possible disturbance is a bobbing motion, also known as plumb bob. In this case, the satellite bounces slightly, causing the tether to slacken and then tighten. The tether may also vibrate, called libration, which causes the tether and satellite to move much like a clock pendulum. Disturbances may also cause a pendulous (or coning) motion (rolling and pitching) of the satellite. The tether may move back and forth in a skip rope motion while the satellite and shuttle remain stable.

In the first series of tests, the orbiter's steering jets will be fired briefly while the satellite is still within 200 yards of Atlantis to see if this will cause libration in the tether and pendulous motion in the satellite. The crew will attempt to stabilize the satellite by manually firing its attitude control thrusters from on board the shuttle while maintaining visual contact with the satellite and using telemetry data from the satellite. The crew will also fire the satellite's thrusters automatically by using the satellite's automatic attitude control system and the shuttle's flight control computers.

When the satellite is about 2.5 miles from the shuttle, tests will be performed so that the crew and flight controllers can measure any disturbances that are imparted to the satellite if the shuttle maintains a looser attitude control than normal and how much motion the satellite and tether impart to Atlantis. In this test, the shuttle's autopilot will be adjusted to allow Atlantis to "wobble" up to 10 degrees in any direction before jets automatically fire to restore its orientation.

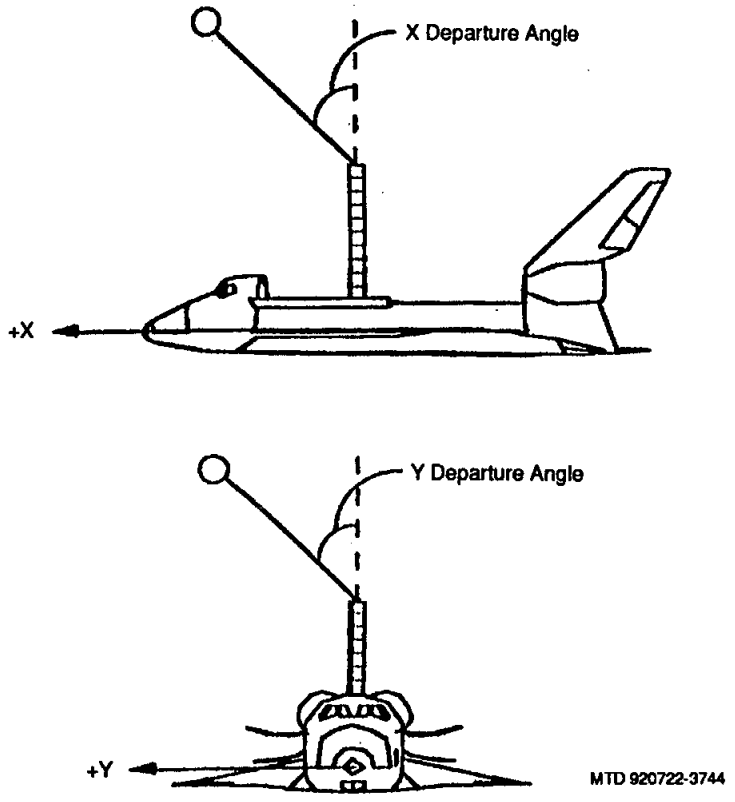

Departure Angle

The standard degree of wobble, or deadband, for tethered satellite operations is 2 degrees.

When the tether is fully deployed to 12.5 miles, electrical current in the tether will be used to damp motion in the tether or satellite. During retrieval, motion will be stopped by using the shuttle's and the satellite's steering jets and a damping system built into the end of the deployment boom.

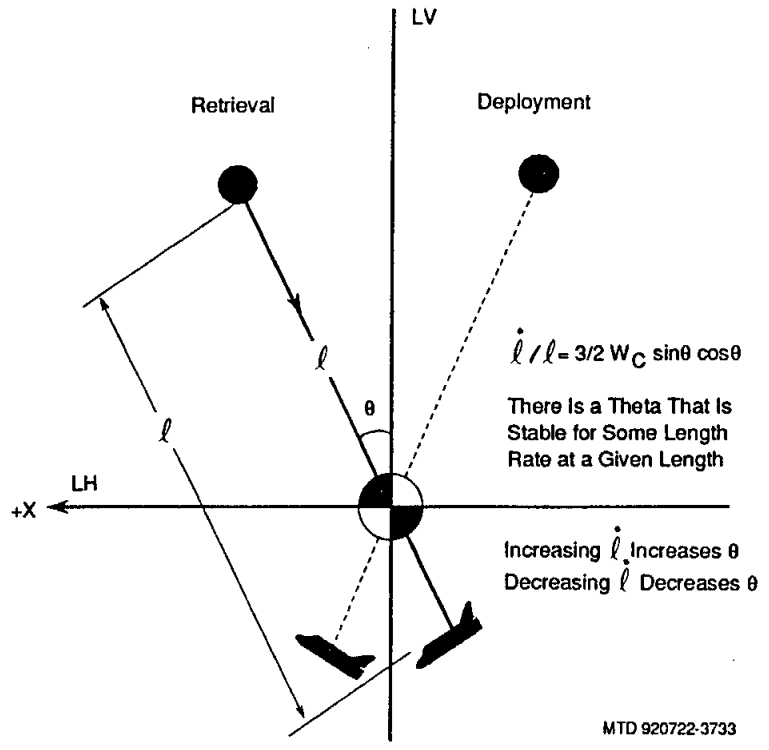

Deployment and Retrieval Dynamics

ON STATION

The deployment phase ends when the 12.5-mile tether length is reached, and the on-station 1 phase begins. This phase will last about 10 hours and includes a number of science activities.

During the on-station 1 phase, electrical power generation will be demonstrated and the current-voltage response of the system will be characterized. Data will be gathered while the satellite is passive (no jet firings) and during jet firings. In one set of tests, the satellite's thrusters will be fired in 2- to 3-second pulses while the orbiter is in free drift. In another test, the thrusters will be fired every 90 seconds

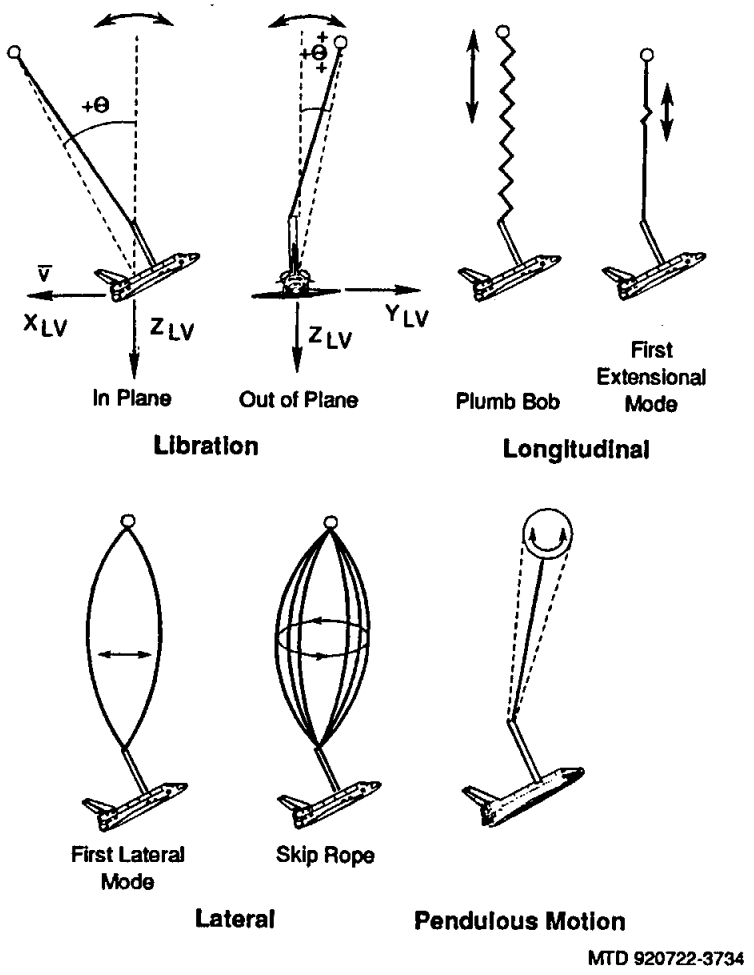

TSS Libration and Oscillations

during a 30-minute period. In a test of transverse impulse, the satellite's translation jets will be fired to obtain a 1-meter-per-second rate.

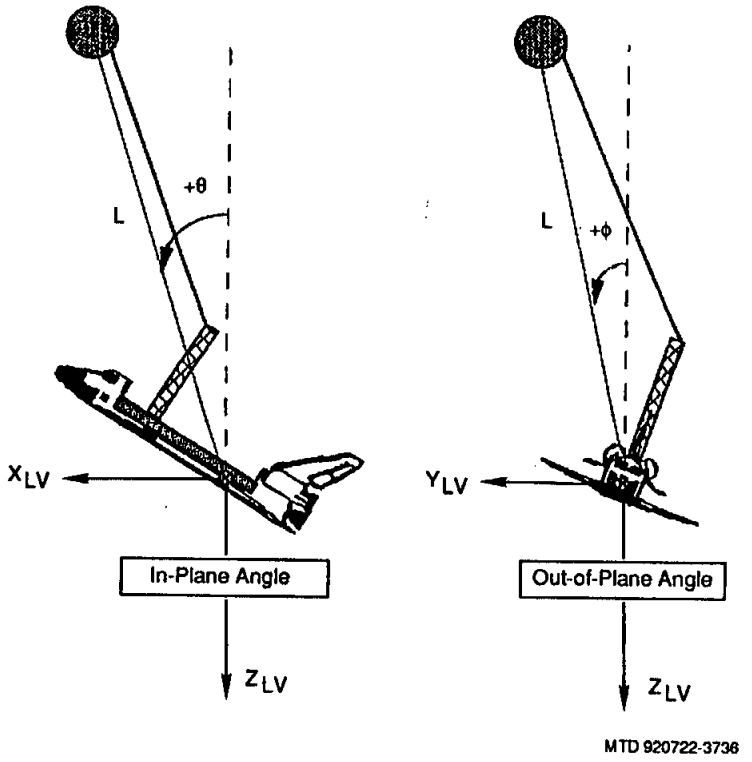

Libration Angle Definition

RETRIEVAL

When the on-station 1 phase is completed, the satellite will be slowly retrieved to within 1.5 miles of Atlantis. This phase will take a little more than 7 hours.

Four hours into the retrieval operation, when the tether is being reeled in at about 3 mph and the satellite is about 4.5 miles from the shuttle, the rate of retrieval will start to decrease. When the satellite is about 1.7 miles from Atlantis, the creep phase will begin. During this phase, the satellite is reeled in at a rate of 0.3 meter per second for 4 hours and 15 minutes until it is about 1.5 miles from Atlantis.

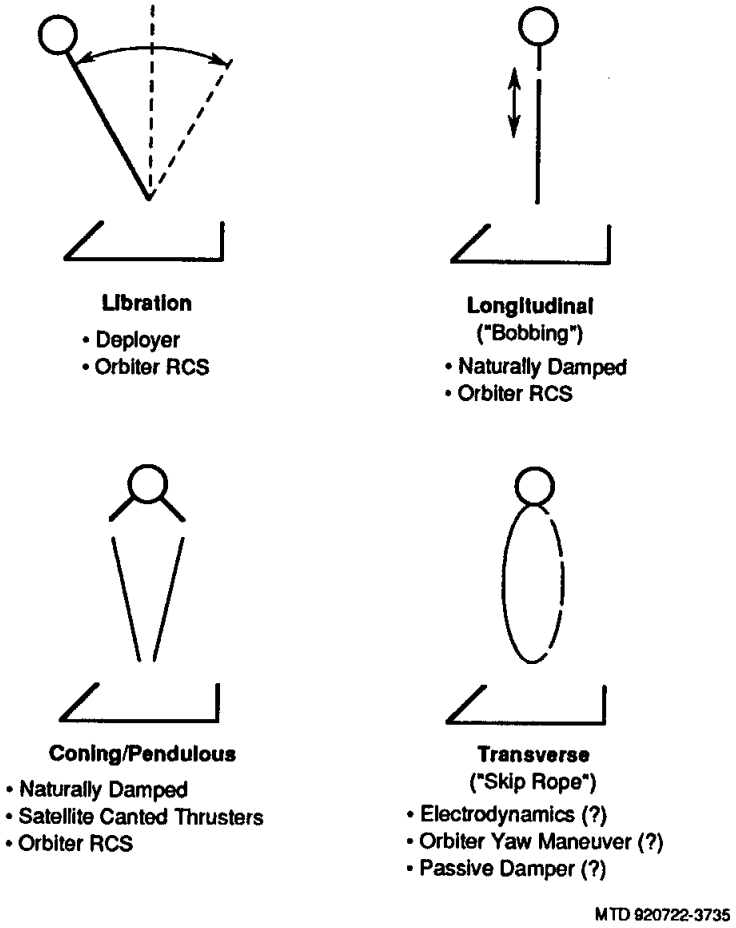

STS-46 Tether Oscillations and Control

The creep period provides time in the retrieval process to carry out any activities necessary to control tether dynamics.

When the satellite is 1.5 miles from the orbiter, the second on station phase begins. During the 5-hour on-station 2 phase, science operations will be conducted and final preparations for retrieval will be made.

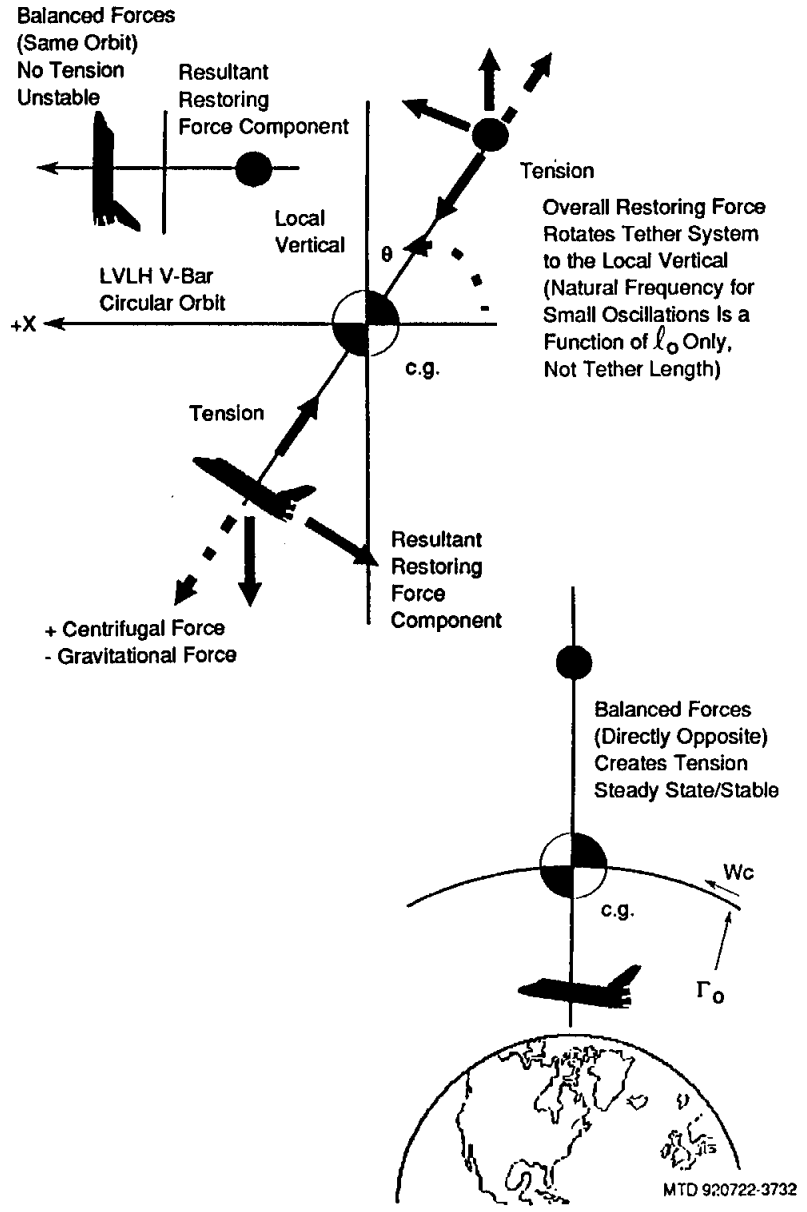

TSS Dynamics on Station

Before the final retrieval phase begins, libration and skip rope motion will be damped to less than 3 degrees and 10 meters, respectively. The rate of retrieval will gradually decrease from about 1.5 mph at the start to a closing rate before docking with the deployment boom of 0.1 mph. During this phase, pendulous motion and any residual skip rope motion will be damped.

After the satellite docks, power will be removed from the satellite and deployer. During the postretrieval safing phase, science activities will be conducted.

Once the science equipment is deactivated, the final phase of the TSS-1 mission begins. The postretrieval quiescent phase continues until the EMP is deactivated just before the crew begins its deorbit preparations.

TETHER SAFETY GUIDELINES

NASA has established guidelines for cutting the tether and releasing the satellite or jettisoning the satellite and boom if it becomes necessary. Two tether cutters are located on the boom: one at the top and one at the bottom. The following are some of the conditions under which the tether would be cut and the orbiter would perform an evasive maneuver:

- The tether breaks.
- The tether departure angle is greater than 60 degrees.
- The orbiter's attitude rates exceed the nominal autopilot values and cannot be corrected before the tether departure angle limit is reached.
- The tether becomes slack near the orbiter or boom and cannot be controlled.
- The satellite cannot be relatched to the deployer.
- Safe docking conditions cannot be maintained.
- Unrecoverable deployer failures prevent retrieval and docking of the satellite.
- Nonisolatable propellant system leak occurs.
- Unrecoverable loss of monitoring and command interfaces to the deployer data acquisition and control assembly occurs during deployed operations.
- Satellite cannot be placed in safe configuration for final retrieval and/or docking.
- Satellite cannot be placed in a safe configuration for orbiter reentry.
- Unrecoverable loss of orbiter +Z translation redundancy occurs while tethered satellite is within 200 feet of the orbiter and the tether length is greater than 10 meters.

Conditions that require the deployer boom to be jettisoned include the following: it cannot be verified that the boom is fully retracted and the satellite is not docked and latched in accordance with NASA flight rules or the satellite is entangled in the docking ring and an extravehicular activity cannot be performed by an astronaut to clear the satellite.

SCIENCE OPERATIONS

The primary goal of the science activities on the TSS-1 mission is to characterize the electrodynamic characteristics of the satellite-tether system. Researchers are particularly interested in how the system interacts with the charged particles and electric and magnetic fields in the ionosphere. The experiments performed on this mission are expected to pave the way for further investigations of naturally occurring phenomena and processes throughout the solar system, including the Earth's magnetosphere.

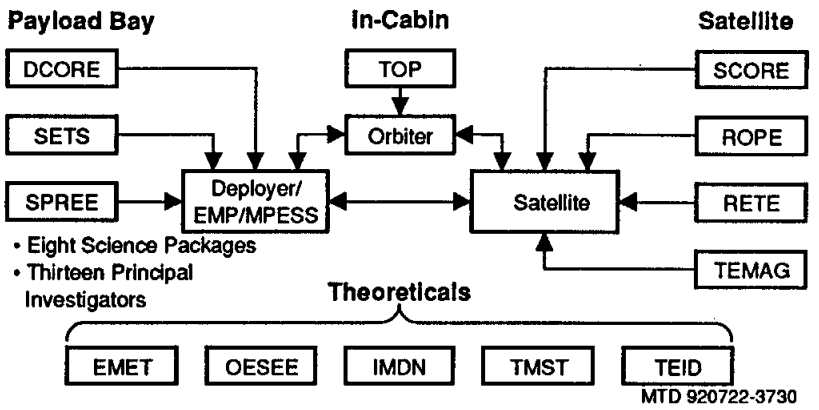

TSS-1 Science Overview

Researchers expect the satellite and tether to create some very interesting plasma-electrodynamic phenomena as they travel through the Earth's magnetized ionospheric plasma at almost 5 miles per second. These phenomena should present them with an opportunity to conduct unique experiments, such as collecting an electrical charge and driving a large-current system within the ionosphere, generating high voltages (5 kilovolts) across the tether when it is fully deployed, controlling the satellite's electrical potential and its plasma sheath (the layer of charged particles created around the satellite), and generating low-frequency electrostatic and electromagnetic waves.

Researchers hope to get a better understanding of the processes by which an electrical current is produced by the satellite-tether-orbiter system, particularly the way that the circuit is closed at the satellite and orbiter. To produce an electrical current, the circuit must be closed. The outer conductive skin of the TSS-1 satellite will collect free electrons from the space plasma, and those electrons will travel down the conducting tether. At the shuttle, two electron guns will fire the electrons back into space, where they are expected to travel along magnetic field lines back to the satellite, completing the circuit. Using the electron guns and tether current control hardware, investigators will study the nature of the external current loop in the ionosphere and the processes involved in closing the circuit.

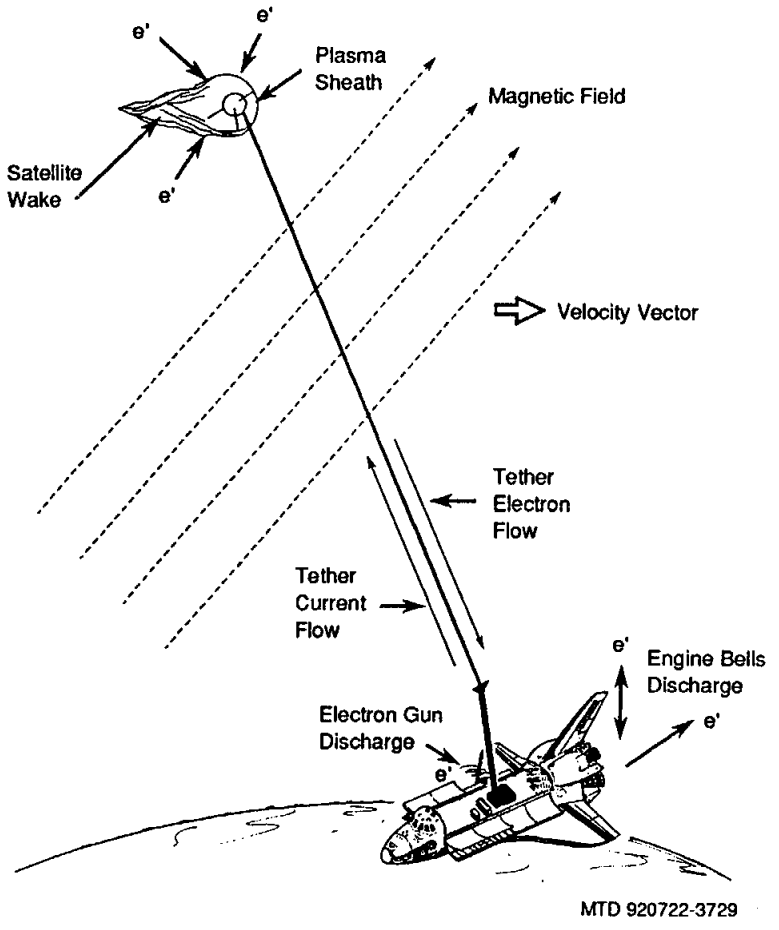

TSS-1 Interactions

There are 11 scientific investigations selected by NASA and the Italian Space Agency on the TSS-1 mission. A 12th experiment has been provided by the U.S. Air Force's Phillips Laboratory. Seven of the experiments simulate or monitor the tether system and its environment. In two cases, instruments on the ground will measure electromagnetic emissions from the TSS. Three of the investigations will seek to support dynamics and electrodynamics theory.

The TSS-1 science experiments are interdependent and, in fact, may be considered to be part of a single complex experiment designed to provide an accurate understanding of the space environment and how it interacts with the tether system. During the TSS-1 portion of STS-46, the leaders of the 12 experiment teams will be seated at a conference table in the Science Operations Center at the Mission Control Center, where they will be able to study science data that will give them an integrated picture of the conditions observed by all of the scientific instruments. This group will be able to replan science activities and request that adjustments be made in the science instruments.

The primary science data will be gathered when the satellite is farthest from the shuttle, during the phase known as on-station 1. Secondary measurements may be taken during the predeployment, deployment, on-station 1, and retrieval phases, but tether dynamic control will take precedence over these secondary objectives.

Computer command sequences stored in an on-board computer will control most of the activities that are not performed by the shuttle's crew. These time line files may be modified during any TSS phase from the ground or by real-time commands sent from the Science Operations Center to the on-board instruments.

Cargo Bay Science

The cargo bay science instruments are mounted on the MPESS. Most of this equipment is controlled by master time line files.

Deployer Core Equipment. Part of the tether current control system, the deployer core equipment contains two identical electron guns (prime and backup), both of which can eject 750 milliamperes of current. The equipment includes a master switch, electron gun control switches, power distribution and electronic control unit, and command and data interfaces. It contains a voltmeter to measure tether potential with respect to the orbiter structure and a vacuum gauge to measure ambient gas pressure to prevent operation in the presence of pressure conditions that might cause electrical arcing.

The deployer core equipment allows the satellite's electrical potential to be varied by controlling the current that flows between the satellite and the orbiter through the tether. The two electron gun assemblies manage current flow in the tether.

The principal investigator for this experiment is Dr. Carlo Bonifazi of the Italian Space Agency.

Shuttle Electrodynamic Tether System (SETS). SETS measures the voltage and current of the tether system and the resistance to current flow in the tether to determine the ability of the tethered satellite to collect electrons. It also studies how electrons emitted from the orbiter structure control the tether's current and measures the orbiter's plasma environment and perturbations of the tether current.

The SETS hardware consists of three instruments to characterize the orbiter's charge and a fast-pulse electron gun to generate an electron beam that will help neutralize the orbiter's charge.

Dr. Peter Banks of the University of Michigan is the principal investigator.

Shuttle Potential and Return Electron Experiment (SPREE). SPREE measures the full ion and electron distribution functions in the energy range of 10 eV to 10 keV in all unobstructed directions of the payload bay. Measurements will be made during the predeployment phase and during all active tethered-satellite operations. The SPREE processes the spectral data collected to determine the orbiter's negative potential with respect to the ambient plasma, return currents to the orbiter caused by the operation of the deployer core equipment and SETS electron guns, and ion and electron heating. It also measures wave particle interactions produced by the operation of the electron guns. This information will be helpful in explaining how the TSS generates a current and how that current is affected by return currents to the orbiter.

SPREE instruments consist of two sets of two nested electrostatic analyzers rotating at approximately 1 rpm. The analyzers sample electrons and ions in and around the payload bay.

The associate investigators for this experiment are Dr. Dave Hardy and Capt. Marilyn Oberhardt of Phillips Laboratory, Bedford, Mass.

Satellite Science

Other science investigation equipment is located on the satellite. Its operation is not apparent to the crew.

Satellite Core Equipment. This equipment controls the electrical current that flows between the satellite and the orbiter. It consists of an ammeter that measures tether current collected on the conductive skin of the satellite and an accelerometer-gyro that measures the satellite's motion and attitude.

The principal investigator is Dr. Carlo Bonifazi of the Italian Space Agency.

Research on Orbital Plasma Electrodynamics (ROPE). This experiment studies the interaction that occurs when a large conducting body moves through collisionless space plasma at supersonic speed. It examines the behavior of ambient charged particles in the ionosphere and ionized neutral particles around the satellite. Scientists hope that comparing readings from ROPE instruments will enable them to determine where the particles that make up the tether current come from and to identify the distribution and flow of charged particles around the satellite.

The ROPE instrument package consists of two sensors—the differential ion flux probe and the soft particle energy spectrometer. The differential ion flux probe is mounted on the fixed boom and measures the energy, temperature, density, and distribution of ambient ions around the satellite and neutral particles that have become ionized in the satellite's plasma sheath. The soft particle energy spectrometer comprises five electrostatic analyzers. Two of the analyzers are mounted on the fixed boom with the differential ion flux probe and are used to determine the electrical potential of the satellite's ionized plasma sheath. The other three analyzers are mounted on the satellite, where they measure the geometric distribution of the current.

The principal investigator for this experiment is Dr. Nobie Stone of NASA's Marshall Space Flight Center, Huntsville, Ala.

Research on Electrodynamic Tether Effects (RETE). The RETE experiment investigates the physical processes in the space charge region surrounding the satellite. These are the processes that determine particle collection and, hence, current in the tether.

Sensors located in canisters on the ends of the satellite's extendable booms sweep the plasma surrounding the spacecraft while the satellite is spinning. The sensors produce a profile of the plasma sheath from measurements of the direct-current potential and electron currents taken while the booms are fully extended and while they are being extended and retracted. A map of the angular structure of the sheath is produced from the same measurements made at a fixed distance from the satellite.

Dr. Marino Dobrowolny of the Italian National Research Council is the principal investigator.

Magnetic Field Experiment for TSS Missions (TEMAG). This experiment investigates the magnetic signature of the tether current and its closure through the structure of the sheath surrounding the satellite. Two magnetometers on the fixed boom measure the magnetic fields around the satellite. By comparing their measurements, researchers can estimate in real time unwanted disturbances in the fields produced by satellite batteries, power systems, gyros, motors, relays, or other magnetic material.

The principal investigator is Professor Franco Mariani of the Second University of Rome.

Theoretical Science Investigations

The theoretical science investigations have no hardware of their own on board the shuttle or satellite. The researchers rely on data acquired by other instruments for their studies.

Investigation of Electromagnetic Emissions by the Electrodynamic Tether (EMET). This experiment establishes the detectability of ultralow-frequency and extremely low-frequency electromagnetic emissions through analytical and observational methods.

Dr. Robert Estes of the Smithsonian Astrophysical Observatory in Cambridge, Mass., is the principal investigator.

Observations at the Earth's Surface of EM Emissions by TSS-1 (OESEE). In cooperation with the EMET experiment, this experiment determines how well electromagnetic very low-frequency, ultralow-frequency, and extremely low-frequency signals from TSS are received on the Earth's surface. Magnetometers and low-frequency receivers at sites around the world will measure the emissions from TSS and track the direction of the waves when electron accelerators pulse the tether current when the satellite is over specific points on the Earth's surface. Because it is operating in the ionosphere, the TSS should radiate waves more efficiently than ground-based low-frequency transmitters.

The principal investigator for this experiment is Dr. Giorgio Tacconi of the University of Genoa.

Theoretical and Experimental Investigation of TSS Dynamics (TEID). The objective of this experiment is to characterize TSS dynamic noise caused by elastic vibration, satellite librations, external excitation, and other events. Investigators will use data gathered by various instruments on TSS dynamics and oscillations over a wide range of frequencies as well as measurements of tether tension and length and magnetic fields for real-time and postflight analyses. The data will be used to develop theoretical models and simulations of tether movement, and these can be used to design future systems.

Professor Silvio Bergamaschi of the University of Padua's Institute of Applied Mechanics is the principal investigator.

Investigation and Measurement of Dynamic Noise in the TSS (IMDN). This experiment, in conjunction with the TEID, will attempt to characterize the dynamic noise environment of TSS-1.

Dr. Gordon Gullahorn of the Smithsonian Astrophysical Observatory is the principal investigator.

Theory and Modeling in Support of Tethered Satellite Applications (TMST). The objective of this experiment is to characterize the electrodynamic coupling between a moving conductor (TSS-1) and the Earth's ionosphere. Numerical models will tell ground-based observers what patterns to expect in the data the experiment gathers on current and voltage, plasma sheaths around the satellite and the orbiter, and the system's response to the operation of electron accelerators.

The principal investigator is Dr. Adam Drobot of Science Applications International Corporation, McLean, Va.

MISSION RESPONSIBILITIES

NASA's Marshall Space Flight Center in Huntsville, Ala., is responsible for the development and integration of the TSS-1 mission. MSFC also has the responsibility for developing and executing the science portion of the mission, and the 12 experiment teams are under the direction of MSFC. The Johnson Space Center in Houston is responsible for the operation of the TSS-1 payload during the mission. The Italian Space Agency, which provided the satellite, some experiments on board the satellite, and the satellite core equipment, will provide engineering support for the satellite and satellite core equipment during the mission. A Marshall payload operations control team stationed at JSC will execute all remote commands to science instruments on the satellite and deployer during the mission.

EUROPEAN RETRIEVABLE CARRIER (EURECA)

EURECA is a reusable free-flying spacecraft that will be deployed from the shuttle Atlantis and will spend 6 to 9 months in orbit conducting microgravity processing and space science experiments. Sponsored by the European Space Agency, EURECA is an element of the ESA Spacelab development program and extends the capabilities of Spacelab because it can remain in orbit longer than Spacelab.

This first in a series of EURECA missions will be devoted primarily to materials processing and life science payloads. Future missions will carry space science payloads, particularly in the fields of astronomy and solar physics, and Earth conservation payloads. The spacecraft can also be used to test interorbit communications, rendezvous, and docking. Much of the research conducted on EURECA will have application to the future space station.

After the EURECA spacecraft is deployed from the shuttle's payload bay, its on-board propulsion unit will boost it to an operational altitude of about 270 nautical miles. During a shuttle mission in 1993, the satellite will rendezvous with the orbiter, and the shuttle crew will capture the satellite with the orbiter's remote manipulator system, place it in the orbiter's payload bay, and return it to Earth, where investigators will evaluate the experiments and refurbish the satellite for its next mission.

EURECA has a five-mission or 10-year lifetime. It has been designed for low-cost ground and flight operations and for a short turnaround time between flights.

Besides offering frequent, low-cost flight opportunities, EURECA has been designed to meet all known requirements of space platform users and will establish a reusable-platform concept that can be adapted to meet evolving needs. Another important goal of the program is to develop an initial platform that meets the essential design, operational, and programmatic requirements of future space station elements.

The EURECA-1 mission consists of 15 experiments in the fields of material science, life sciences, and radiobiology. Some of the investigations involve protein crystallization, the biological effects of space radiation, measurements of fluids' critical points in microgravity, measurements of solar irradiation, the solar-terrestrial relationship in aeronomy and climatology, and electric propulsion in space.

Scientists from Belgium, Germany, Denmark, France, Italy, Great Britain, and The Netherlands will participate in the mission.

The ESA Space Operations Centre in Darmstadt, Germany, will control all EURECA operations. During the deployment and retrieval of the satellite, ESOC will operate as a remote payload operations control center of NASA's Mission Control Center in Houston and will use the orbiter as a relay station for commanding the EURECA spacecraft. During the operational phase, ESOC will transmit commands to EURECA through two ground stations. Since EURECA will be out of contact with the ground stations most of the time, it has been designed to operate with a high degree of autonomy.

One of the payloads on EURECA-1, the interorbit communication package, will be used to demonstrate communication via a data relay satellite. Such a system could significantly enhance real-time data coverage, and ESA plans to use the IOC on future EURECA missions.

THE EURECA SPACECRAFT

EURECA's framework consists of high-strength carbon-fiber struts and titanium nodes. This structure is easy to assemble and

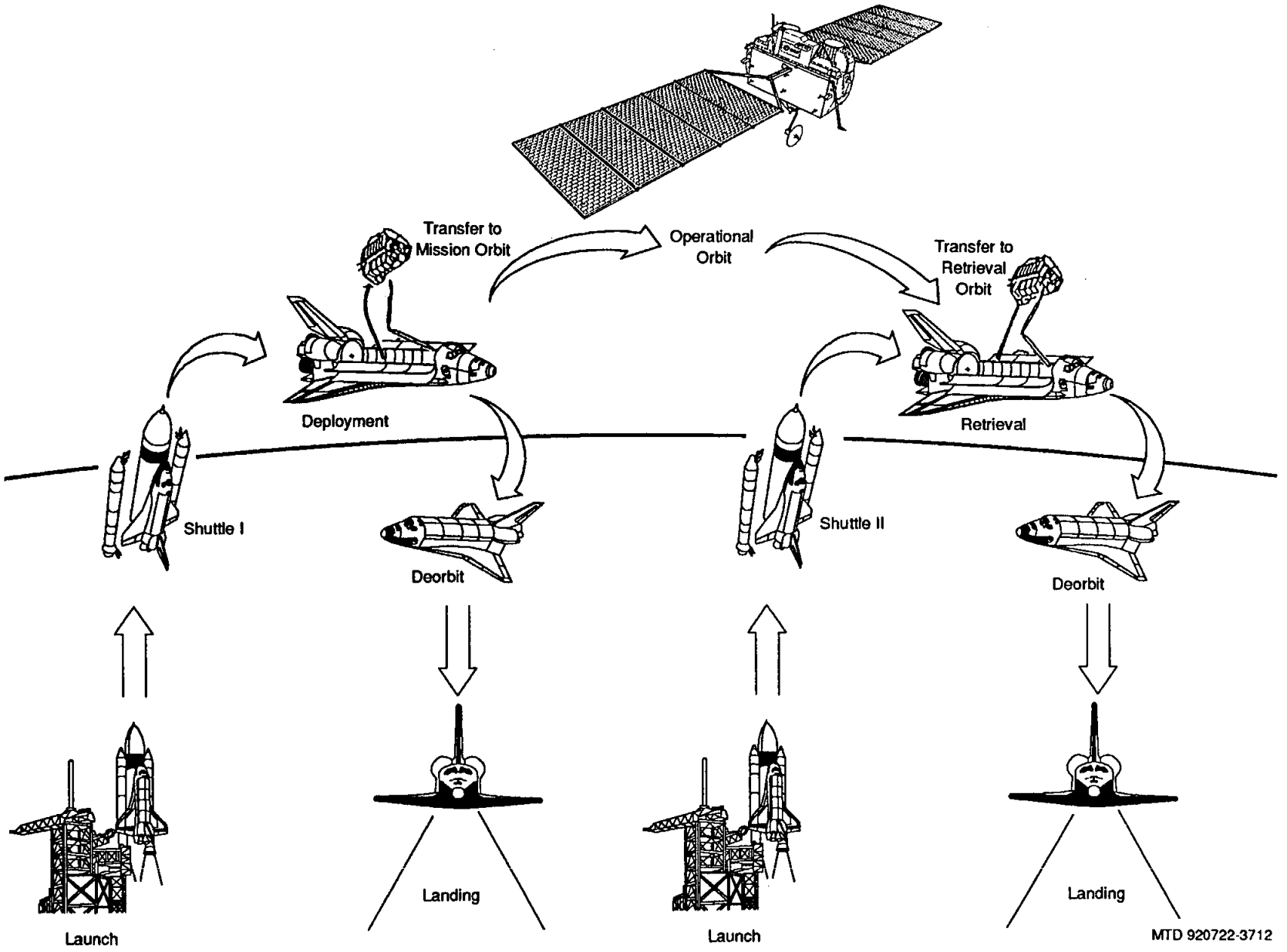

EURECA Flight Scenario

maintain and is subject to relatively low thermal distortion. EURECA uses a standard three-point latching system for attaching to the shuttle payload bay. The spacecraft and its payloads weigh approximately 10,000 pounds.

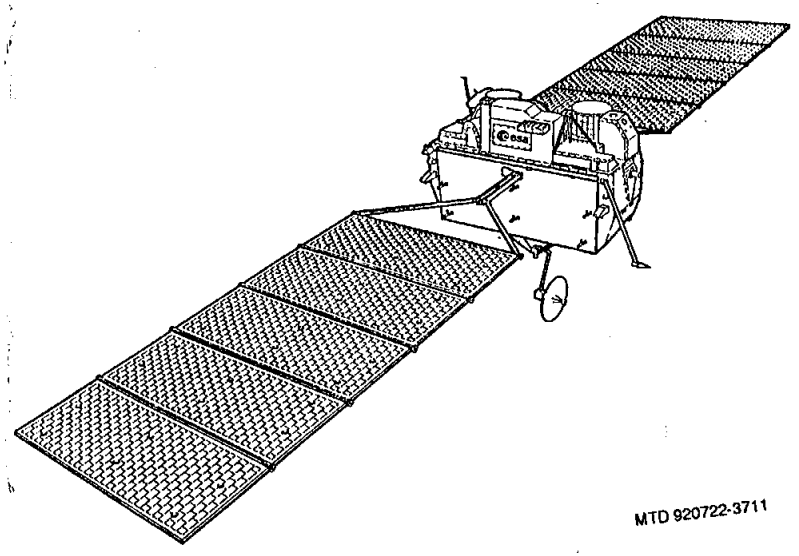

EURECA Flight Configuration

EURECA uses active and passive heat transfer systems for thermal control. The active system consists of a Freon cooling loop that rejects heat generated by payloads to space. Multilayer insulation and electrical heaters form the passive system.

On orbit, EURECA generates, stores, conditions, and distributes electrical power to its subsystems and payloads. Retractable solar array panels and four 40-amp-hour nickel-cadmium batteries provide a continuous supply of 1,000 watts of electrical power.

For flight operations and orbit control maneuvers, attitude determination and spacecraft orientation and stabilization are provided by EURECA's attitude and orbit control subsystem. The

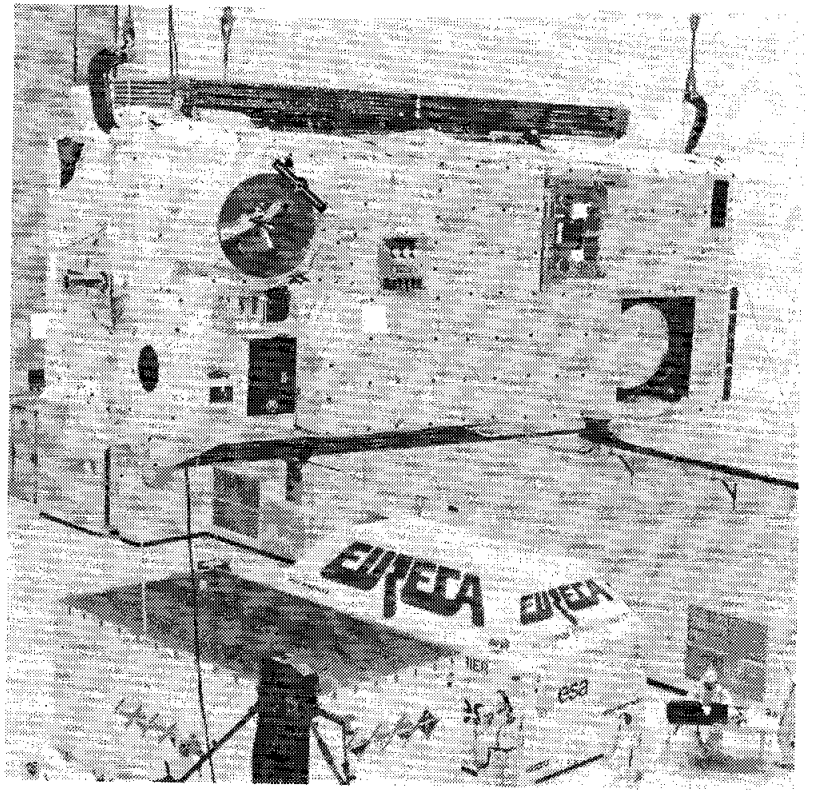

Workers in KSC Vertical Processing Facility Transfer EURECA to Test Cell

AOCS has been designed to meet all mission requirements, even if the on-board subsystem that receives and executes instructions is not available for up to 48 hours. The AOCS includes the orbit transfer assembly, which boosts EURECA from its deployment altitude of 162 nautical miles to its operational orbit and returns it to the shuttle for retrieval.

Remote control and autonomous operations are functions of the data handling subsystem. Instructions are stored and executed, telemetry data is stored and transmitted, and the spacecraft and its

payloads are controlled when EURECA is out of contact with the ground through the DHS.

SCIENCE

Automatic Mirror Furnace (AMF)

The objective of the AMF investigation is to grow single, uniform crystals from electronic materials in liquid or vapor phases using either the traveling heater or Bridgman method. The AMF is an optical radiation furnace that uses a halogen lamp to heat the samples. Radiation from the 300-watt lamp is focused on the material by an ellipsoidal mirror. The AMF can produce temperatures of up to 1,200°C, depending on the sample being used.

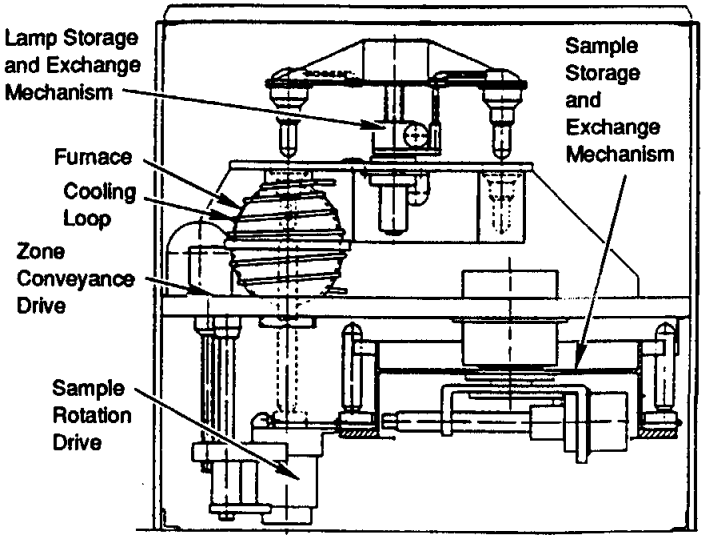

MTD 920721-3713

Automatic Mirror Furnace

Two mirror furnaces have been flown on Spacelab missions, but the AMF is the first of a new type of crystal growth facility that has a sample and lamp exchange mechanism. AMF operations are fully automatic, and it can process up to 20 samples during a 6-month mission.

K.W. Benz of the Kristallographisches Institut, University of Freiburg, Germany, is the principal investigator.

Protein Crystallization Facility (PCF)

The PCF is designed to take advantage of months-long exposure to microgravity to grow large, pure crystals from solutions. It can grow up to 12 crystals simultaneously in individual independently controlled experiments.

Each sample canister contains three solutions: protein, buffer, and salt. The protein and salt solutions diffuse into the buffer solution, and the salt causes the protein to form crystals. During the crystallization process, the processing temperature must remain within a small range, and the quality of the crystals produced depends on the temperature chosen.

The PCF is equipped with a video system that transmits still pictures of the processing to the ground to allow researchers to assess progress.

The principal investigator for the PCF is W. Littke of Chemisches Laboratorium, University of Freiburg.

Multifurnace Assembly (MFA)

The MFA accommodates as many as 12 furnaces that can process a wide range of materials. It subjects the material samples to predefined thermal conditions and can generate and transmit housekeeping data.

The principal investigator is A. Passerone of the Italian National Research Council's Ist. di Chimica Fisica Applicata dei Materiali.

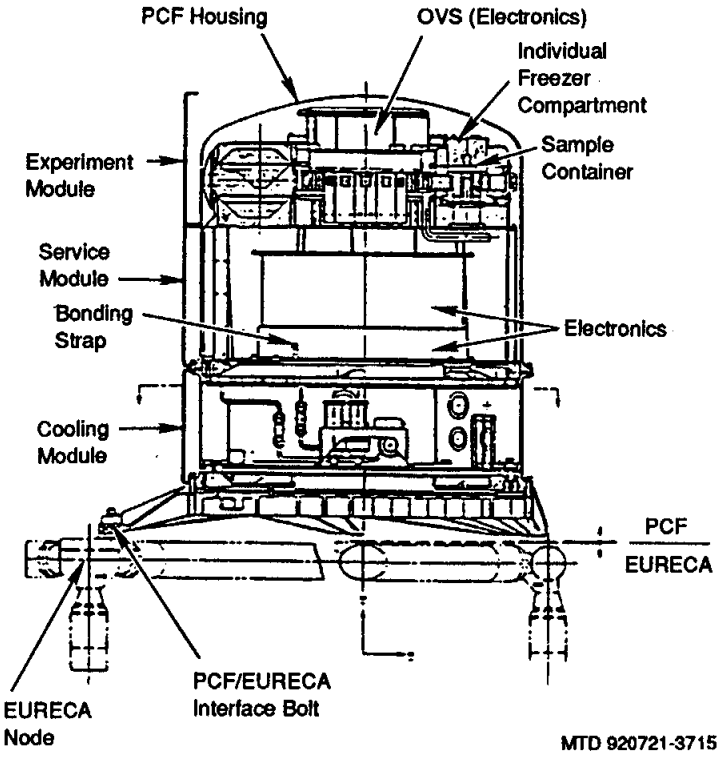

Protein Crystallization Facility (Excluding Battery Package)

Exobiology and Radiation Assembly (ERA)

ERA experiments examine the biological effects of space radiation. It exposes biological and life science samples to the vacuum of space and deep-space radiation to increase knowledge of the interaction of cosmic ray particles with biological matter, the synergism of space vacuum and solar ultraviolet, and the spectral effectiveness of solar ultraviolet on viability.

The ERA is a boxlike structure that is open on one side. It houses six cylindrical biostacks that contain dormant biological samples and radiation detectors. Two of the biostacks also have electronic units that operate light-emitting diodes and monitor the biostacks' internal temperature. The ERA is equipped with deployable trays which expose biological samples to space radiation. Optical bandpass filters are used to select the type of radiation the samples are exposed to.

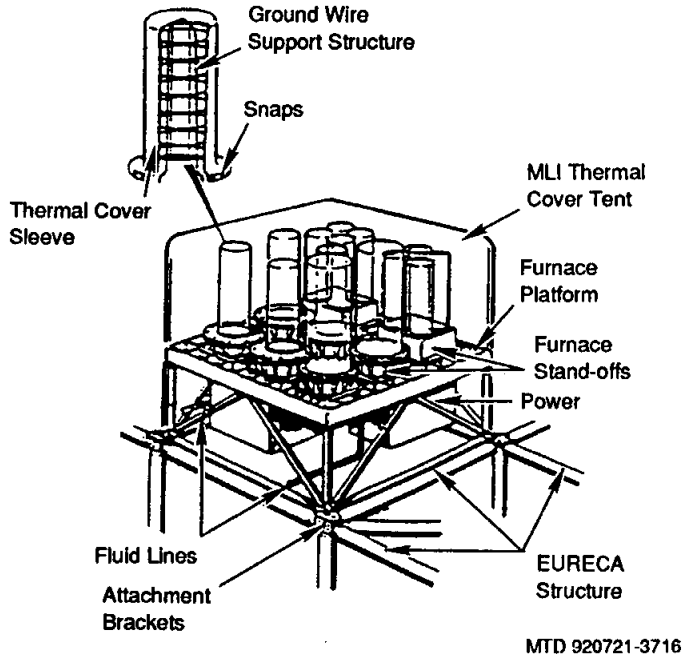

Multifurnace Assembly

H. Bücker of the German Aerospace Research Establishment's Institut für Flugmedizin Abteilung Biophysik is the principal investigator.

High-Precision Thermostat (HPT)

HPT measures the adsorption coefficient of sulfur hexafluoride close to its critical point on graphite carbon so that researchers can better understand the basic physics around the critical point of fluids. For this experiment, investigators will use a new volumetric technique to measure the adsorption coefficient at various temperatures from the reference temperature to near the critical temperature.

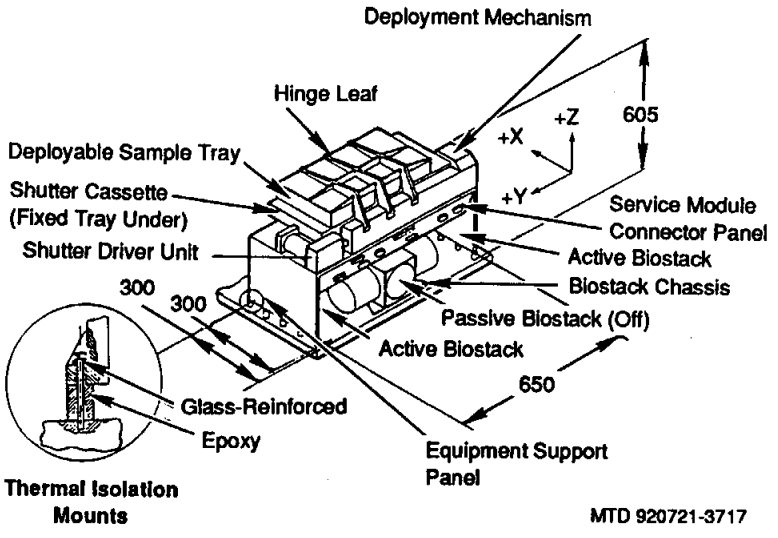

Exobiological and Radiation Assembly

They will then compare their results with measurements obtained on Earth and with theoretical predictions.

The experiment is housed in a getaway special container. It has two stepper motors that adjust the densities of the reference and measuring cells.

The principal investigator is G. Findenegg of the Ruhr University, Bochum, Germany.

Surface Forces Adhesion (SFA)

By investigating the mechanisms of adhesion between solid bodies, the SFA experimenters will refine their understanding of phenomena related to adhesion, such as friction and wear. The findings will allow them to investigate the use of cold welding techniques in space and will be used to assess the suitability of using adhesion to position solid bodies in microgravity.

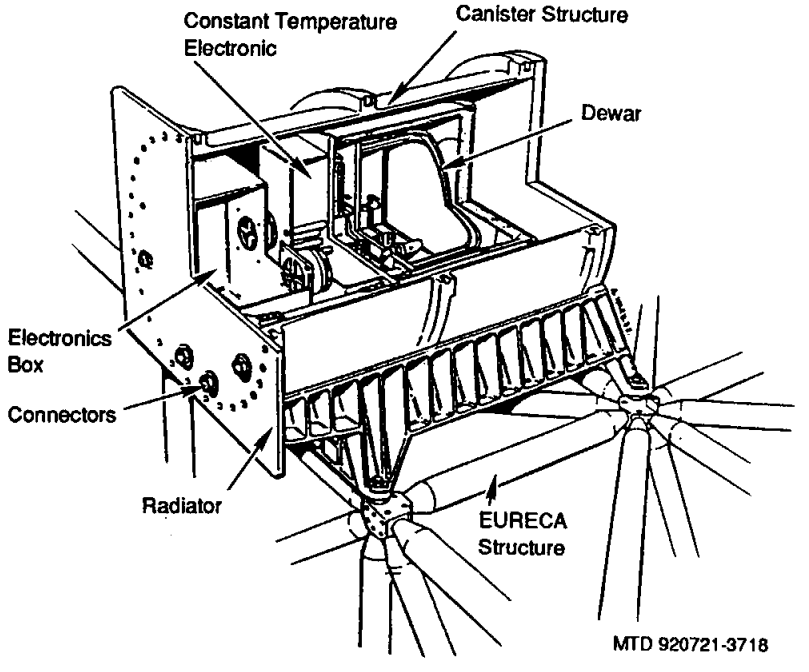

High-Precision Thermostat

The SFA fires small 0.3- to 0.5-kilogram spherical projectiles against a target plane. The restitution coefficient of the rebound after the collision is measured as a function of the incoming velocity of the projectile. Approximately 172,000 projectiles will be launched at the targets.

The principal investigator for SFA is G. Poletti of the University of Milan, Italy.

Solar Spectrum (SOSP)

The SOSP experiment studies solar physics and the solar-terrestrial relationship as it relates to the upper atmosphere and climate. The SOSP instrument measures the absolute solar irradiance and its variance from 170 to 3,200 nm. Two or three EURECA missions

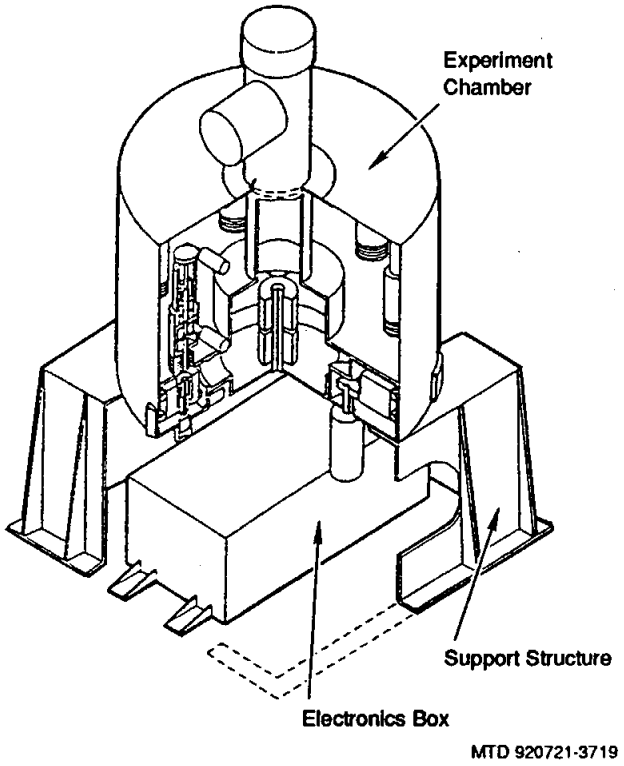

Surface Forces Adhesion

will be needed to measure and assess long-term variations in solar irradiance.

G. Thuillier of Service d'Aeronomie du Centre National de Recherche Scientifique, France, is the principal investigator.

Occultation Radiometer (ORA)

The ORA samples the attenuated solar radiance during the sunrise and sunset phases of each orbit to measure the density of aerosols and trace gases in the Earth's menosphere and stratosphere.

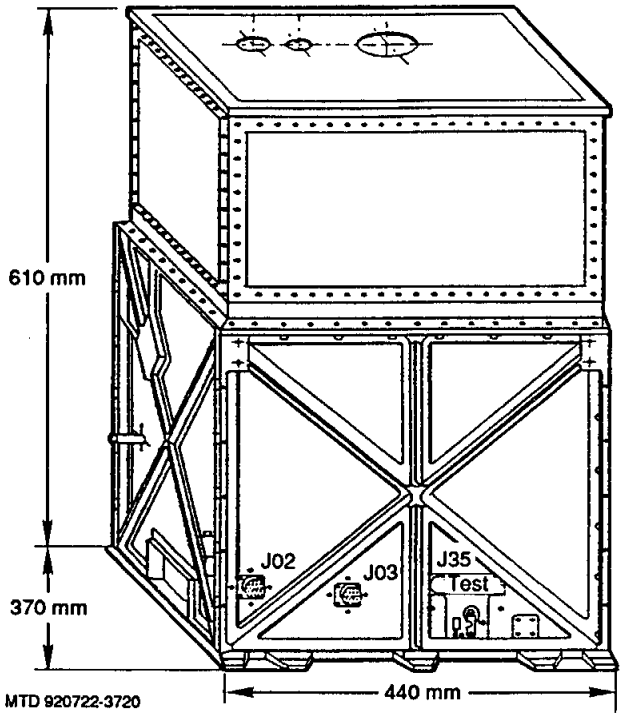

Solar Spectrum

ORA has two separate optical detectors: one for visible and ultraviolet light and one for infrared light. The validity of its measurements is dependent on EURECA maintaining its sun-pointing accuracy.

E. Arijs of Belgisch Instituut voor Ruimte Aeronomie, Brussels, Belgium, is the principal investigator.

Wide-Angle Telescope for Cosmic Hard X-ray Transients (WATCH)

The primary objective of this investigation is to detect and locate X-ray transients and gamma ray bursts. A secondary objec-

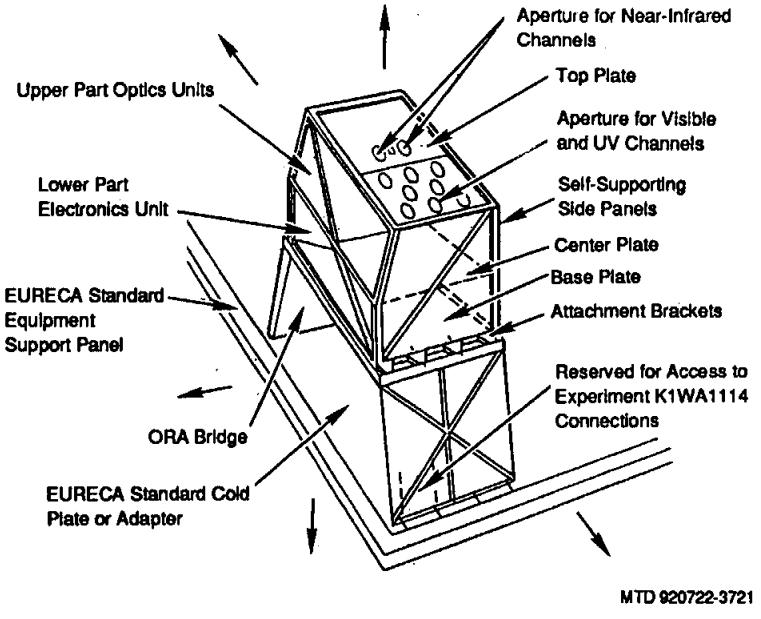

Occultation Radiometer

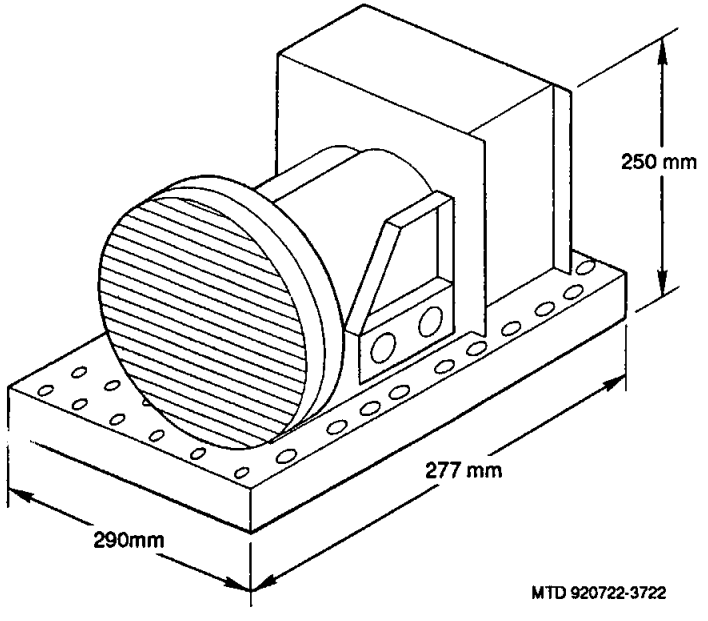

Wide-Angle Telescope for Cosmic Hard X-Ray Transients

tive is to monitor persistent, bright X-ray sources within the instrument's field of view.

WATCH can detect celestial gamma and X-ray sources with photon energies from 5 to 200 keV and determine their positions. The data gathered can be used for several purposes, including identifying regularities in the time variations related to orbital movement or rotation or spectral features that reveal more about the source.

The principal investigator is N. Lund of the Danish Space Research Institute, Lyngby, Denmark.

Timeband Capture Cell Experiment (TICCE)

The TICCE instrument captures micron-size particles in near-Earth space for postmission analysis. Investigators will examine the instrument after it is returned to Earth to determine the rate of particle impact, the angle of incidence, and the timeband when each particle arrived. They will also be able to identify the microparticle residue and arrive at conclusions about the origin of the particles.

J.A.M. McDonnell of the Unit for Space Science of the Physics Laboratory at the University of Kent, United Kingdom, is the principal investigator.

Radio Frequency Ion Thruster Assembly (RITA)

RITA is an experimental thruster designed to evaluate the use of electric propulsion for spacecraft. It uses xenon gas and is designed to operate for 2,000 hours.

Electric propulsion is being studied for future long-duration space missions because conventional systems would be too bulky.

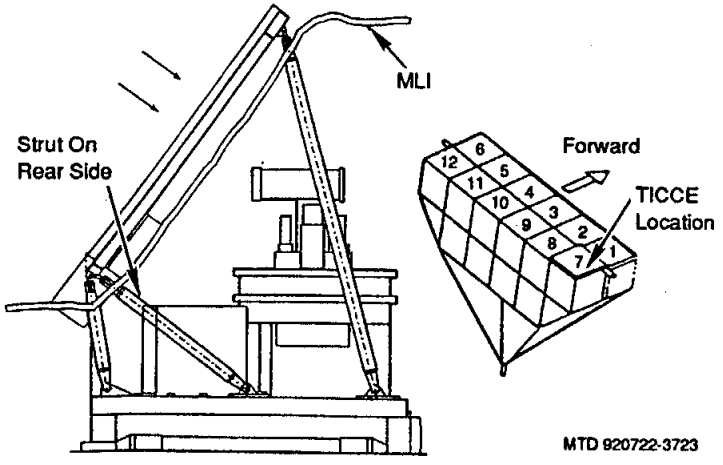

Timeband Capture Cell Experiment

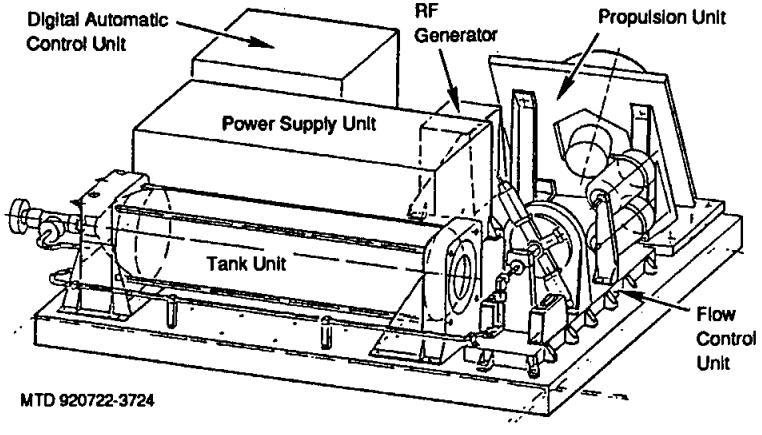

Radio Frequency Ion Thruster Assembly

RITA generates thrust by electrostatic acceleration of positive xenon ions. Electrons are fed into the ion beam to neutralize it in order to avoid charging RITA. Exhaust velocities are about an order of magnitude greater than those of chemical propulsion systems.

The principal investigator is H. Bassner of MBB Deutsche Aerospace, Munich, Germany.

Advanced Solar Gallium Arsenide Array (ASGA)

ASGA will test the performance of different types of gallium arsenide (GaAs) solar cells in low Earth orbit. During the EURECA mission, electrical I/V curves and thermal data relevant to the different strings of GaAs cells mounted on a fixed solar panel will be recorded to establish the cells' performance trend.

GaAs solar cells have already been used on a trial basis on the Soviet Mir space station. They are expected to be a critical part of the next generation of European solar energy generators.

C. Flores of CISE SPA, Segrate, Italy, is the principal investigator.

Solution Growth Facility (SGF)

The SGF grows different types of crystals from solutions at temperatures from 35°C to 60°C. The SGF configuration consists of three identical chemical reactors for growing crystals and a fourth smaller container for measuring the ratio of the thermal to isothermal diffusion coefficient of 20 mixtures of liquids.

J.C. Legros of the Université Libre de Bruxelles, Brussels, Belgium, is the principal investigator.

Solar Constant and Variability Instrument (SOVA)

SOVA measures the solar constant and its variability and spectral distribution. It also measures variations in the total and spectral solar irradiance over periods of a few minutes to several hours, hours to a few months, and years (solar cycles).

The principal investigator is D. Crommelynck of the Institut Royal Météorologique de Belgique, Brussels, Belgium.

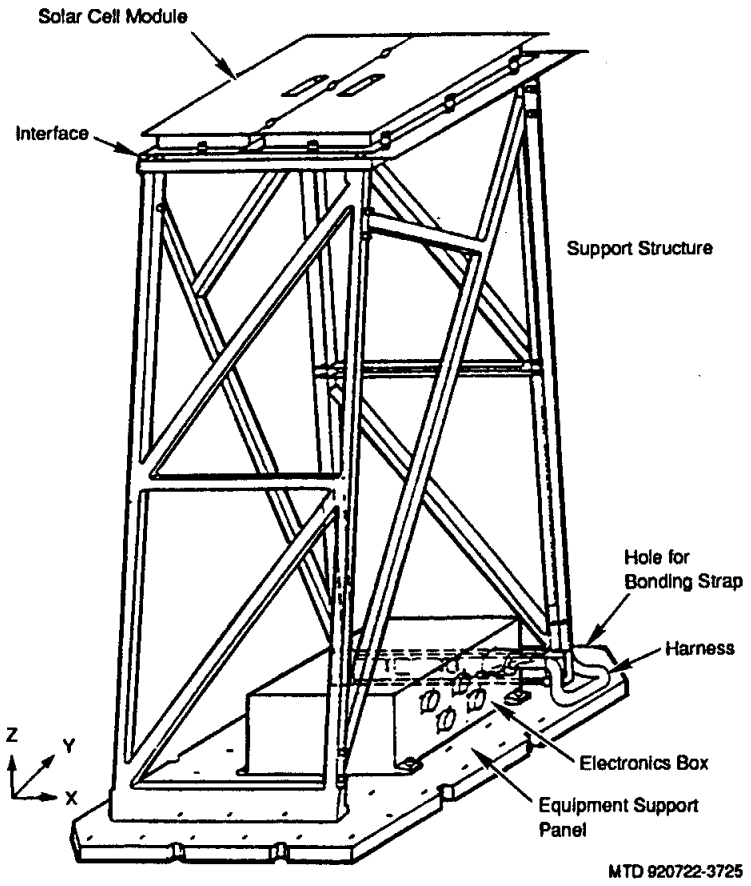

Advanced Solar GaAs Array

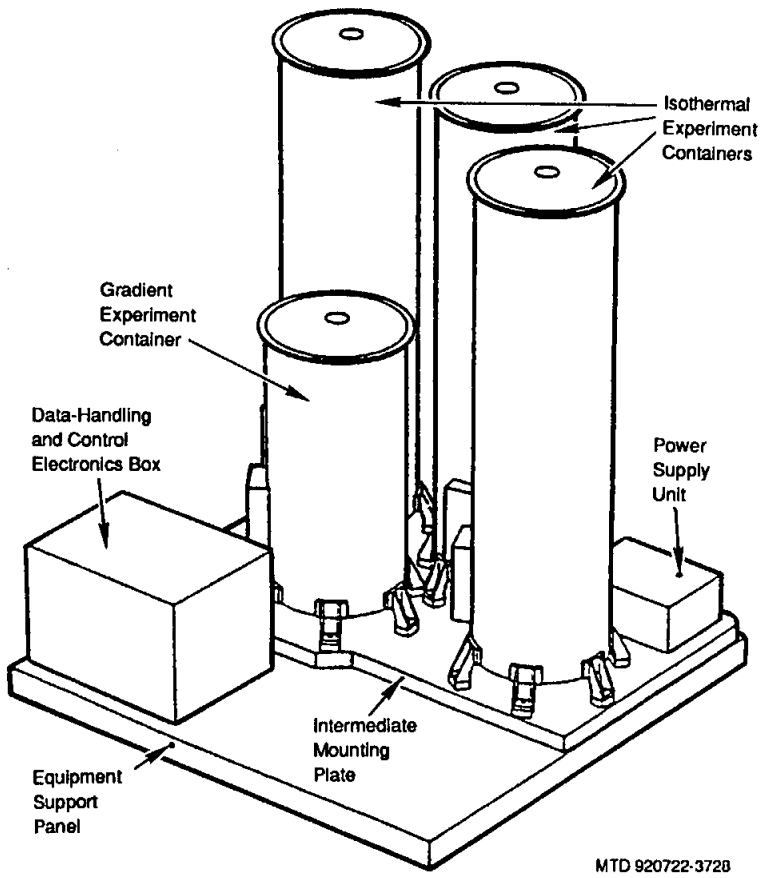

Solution Growth Facility

Interorbit Communication (IOC)

The IOC is a technology experiment that uses EURECA and the European Olympus communications satellite for a preoperational test and demonstration of the main functions, services, and equipment typical of a data relay system. The IOC will exchange test commands and data with an IOC ground station through the Olympus satellite. The IOC instrument has a mobile directional antenna to track Olympus, and Olympus is equipped with two steerable spot beam antennas, one pointed toward the IOC on EURECA and the other pointed toward the IOC ground station.

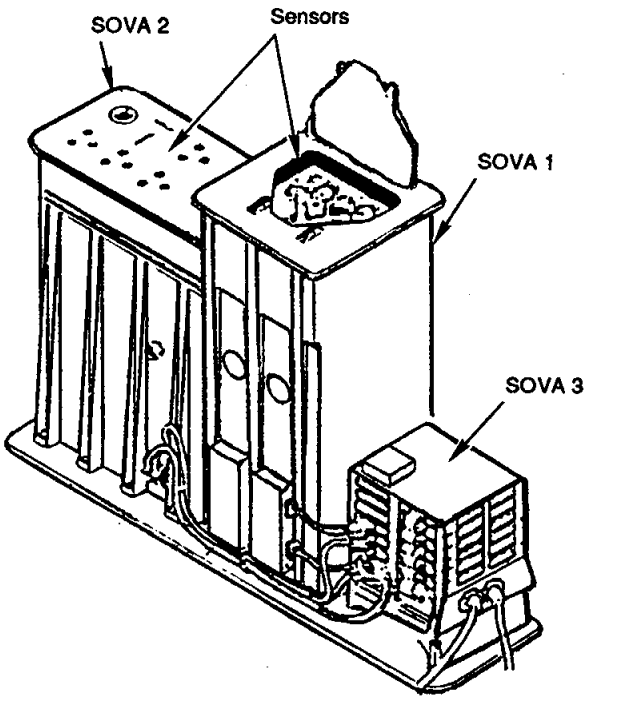

Solar Constant and Variability Instrument

R. Tribes of the French Space Agency and N. Neale of the European Space Agency are the project managers.

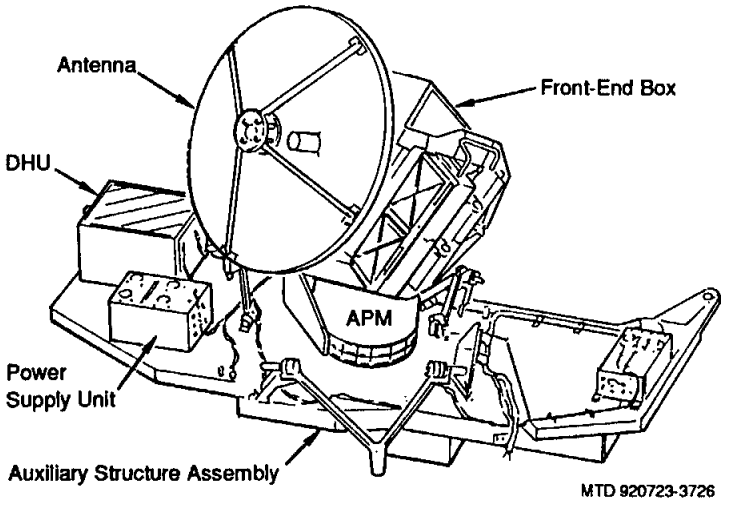

Interorbit Communication Experiment

EVALUATION OF OXYGEN INTERACTION WITH MATERIALS III/THERMAL ENERGY MANAGEMENT PROCESSES 2A-3 EXPERIMENTS

The EOIM-III and TEMP 2A-3 are independent experiments integrated on the same mission-peculiar equipment support structure (MPESS) payload carrier in the orbiter's payload bay.

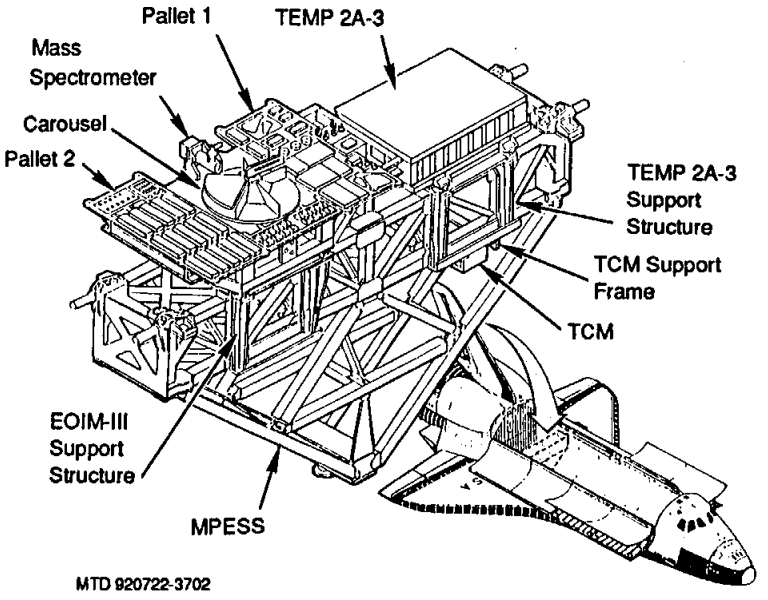

EOIM-III/TEMP 2A-3 Payload Configuration

EOIM-III

EOIM-III will obtain accurate reaction rate measurements of the interaction of spacecraft materials with atomic oxygen, the principal constituent within the low-Earth-orbit environment. The data will be used to help determine suitable materials for long-duration space structures, including space station Freedom. It will also measure the local space shuttle environment, ambient atmosphere, and interactions between the two. The results will be used to improve the understanding of the effect of the shuttle environment on shuttle and payload operations and will update current models of atmospheric composition. EOIM will also study the effects of mechanical stress on erosion rates of advanced composites and the effects of temperature on reaction rates of disk specimens and thin films.

The EOIM-III payload consists of five main components: a carousel system, mass spectrometer system, passive pallet, active pallet, and power and avionics subsystems. Several subexperiments are also included in the payload. Those requiring activation and deactivation by the crew include the heated plate experiment (HPE), the solar ultraviolet experiment (SUV), the environment monitor package experiment (EMP), the atomic oxygen monitor (AOM), and the variable exposure tray (VET).

The mass spectrometer rotating carousel system contains "modeled" polymers to study the atomic oxygen surface interaction mechanisms leading to surface recession. The ion-neutral mass spectrometer will obtain aeronomy measurements and study atom-surface interaction products. Energy accommodations on surfaces and surface-atom emission characteristics concerning surface recession will be measured using passive scatterometers.

The environment monitor package will be activated before the launch, while the remainder of the payload will be activated after payload bay door opening. Experiment measurements will be made throughout the flight, and the package will be powered down during deorbit preparations.

The EOIM-III experiment will be conducted during a single 40-hour cycle. During this period, the experiment will operate automatically and require only that the crew start and stop the cycle from a standard switch panel (SSP). The cycle can be interrupted by the crew for orbiter operations (i.e., inertial measurement unit [IMU] alignments) by using the SSP. During the experiment cycle, the

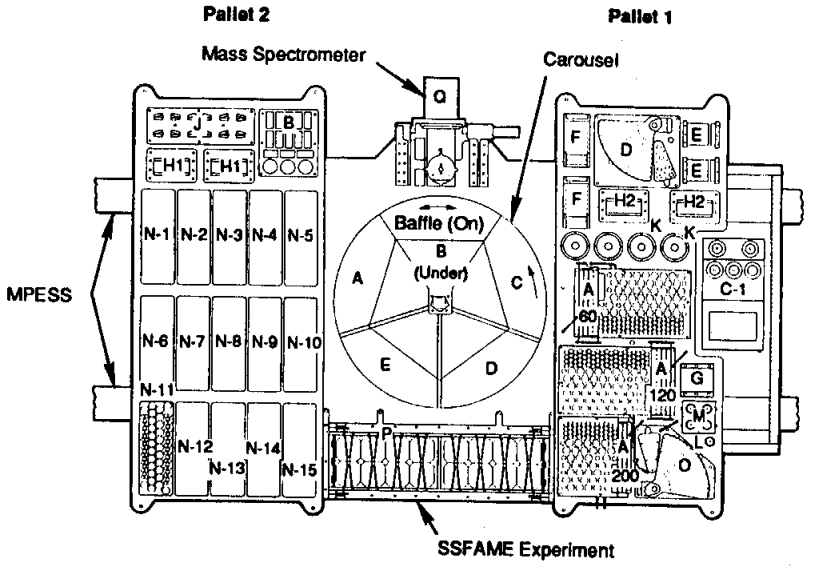

Experiments
A - Heated Plate (JSC), 3
B - Atom Scattering Experiment (UAH), 1
C - Environment Monitor Package (GSFC), 1
D - Solar UV Experiment (JSC), 1
E - Static Stress Fixture (MSFC), 2
F - Uniform Stress Fixture (MSFC), 2
G - Atomic Oxygen Monitor (MSFC), 1
H1 - Composite Stress Fixture (LaRC), 2
H2 - Composite Stress Fixture (JSC), 2
I - Scatterometer (JPL), 2
J - Mechanical Stress Fixture (LeRC), 11
K - Reflectometer (LeRC), 2
L - Pin-Hole Camera (LeRC), 1
M - Scatterometer (Aerospace Corp.), 1
N - Sample Carriers, 15
O - Variable Exposure Tray, 1
P - Freedom Array Materials Exposure Experiment (LeRC), 1
Q - Mass Spectrometer (AFGL), 1

MTD 920721-3701

Mass Spectrometer and Pallet Experiments

orbiter must be maintained within 2 degrees of a -ZVV (bay-to-RAM) attitude.

EOIM-III investigators are concerned with the possibility of contamination of the unprotected samples on the EOIM-III sample trays and carousel. Because the EOIM-III experiment data will be acquired after the mission by analysis of the material samples, with the exception of the mass spectrometer data and subsystem data, contamination of the samples before this analysis may cause the loss of the sample data. As a result of this sensitivity, primary reaction control system and all water dumps (except flash evaporator system) will not be scheduled during the measurement cycle. Water dumps during all other mission phases will be performed retrograde to reduce the potential of recontact with the water particles and impingement on the EOIM-III samples.

EOIM-III is sponsored by NASA's Johnson Space Center.

TEMP 2A-3

The TEMP 2A-3 experiment tests a small mechanically pumped two-phase thermal control system in both the 1-g and 0-g environments. TEMP uses the latent heat of vaporization of its ammonia working fluid to transport large amounts of heat over large distances and yet maintain a nearly constant temperature. The technology being tested by TEMP is needed to meet the increased thermal control requirements of space station Freedom. TEMP will also evaluate a propulsion-type fluid management reservoir in a two-phase ammonia system, measure pressure drops in a two-phase fluid line, evaluate the performance of a two-phase cold plate design, and measure heat transfer coefficients in a two-phase boiler experiment.

The TEMP 2A-3 experiment consists of two-phase mounting plates, a reservoir, mechanical pumps, a flow meter, boiling and pressure drop experiments, a radiator, valves, and instrumentation.

Power will be turned on to the TEMP 2A-3 by the crew via the SSP. After activation, the TEMP 2A-3 experiment will be conducted by ground commands sent from the Payload Operations Control Center. The TEMP 2A-3 experiment will be conducted during 24 power cycles lasting approximately 3 hours (two orbits) per cycle. TEMP 2A-3 will have a 30-minute to 3-hour heater activation period followed by a 0 to 2-1/2-hour cooldown period during each cycle. TEMP 2A-3 experiment operations are compatible with the

EOIM-III -ZVV operational attitude and require only a -ZLV or colder attitude.

TEMP 2A-3 is sponsored by NASA's Goddard Space Flight Center.

CONSORTIUM FOR MATERIALS DEVELOPMENT IN SPACE COMPLEX AUTONOMOUS PAYLOADS II AND III/LIMITED DURATION SPACE ENVIRONMENT CANDIDATE MATERIALS EXPOSURE

The four complex autonomous payloads (CAPs) manifested on STS-46 are nonstandard secondary payloads in NASA's CAP program. They use the small self-contained payload standard carrier system hardware (getaway special hardware) and are sponsored by NASA's Goddard Space Flight Center Shuttle Small Payload Project (SSPP).

The payloads are controlled through the autonomous payload control system (APCS), which includes the command encoder known as the autonomous payload controller (APC), the auxiliary input/output (I/O) data line, GAS control decoders (GCDs), and payload power contactors (PPCs). The CAPs are compatible with the enhanced APC used by the IMAX cargo bay camera.

The payloads include the Consortium for Materials Development in Space Complex Autonomous Payload II (CONCAP II), CONCAP III, configuration C of the Limited Duration Space Environment Candidate Materials Exposure (LDCE), and LDCE 3. Configuration C of LDCE consists of LDCE 1 and LDCE 2.

The CAPs are integrated into standard 5-cubic-foot GAS cylindrical canisters. They are mounted on 125-pound Johnson Space Center-supplied adapter beams in the payload bay, with connecting cables to provide communication to the experiment via the APC. CONCAP II is located in the aft portion of the starboard side of bay 13, with a GAS canister fitted with a motorized door assembly. CONCAP III/LDCE 3 is located in the forward portion of the bay. LDCE 1 is located in the forward portion of the port side of bay 13 with a GAS canister fitted with a sealed door assembly. LDCE 2 is located in the aft portion with a GAS canister fitted with an MDA.

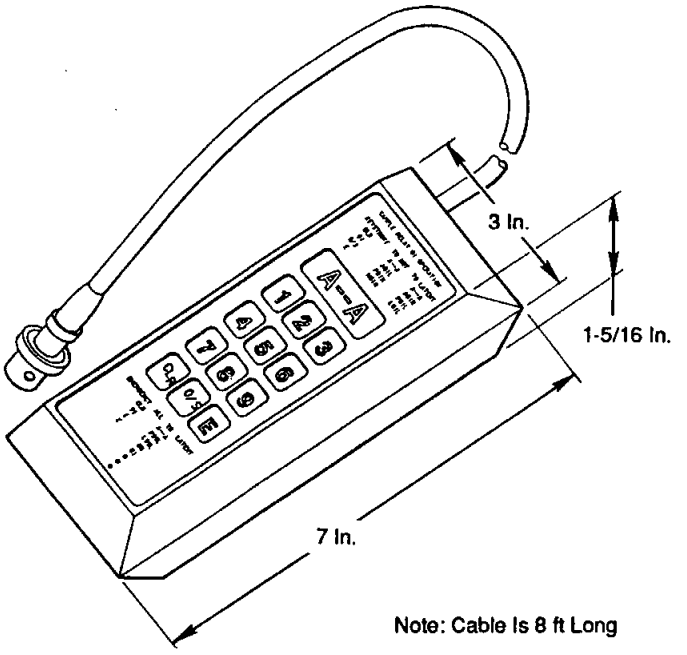

Autonomous Payload Controller

CONCAP II/III

CONCAP II is designed to study the changes that materials undergo in low Earth orbit. The payload involves two types of experiments to study the surface reactions resulting from exposing materials to the atomic oxygen flow experienced by the space shuttle in orbit. The atomic oxygen flux level will also be measured and recorded.

The first experiment will expose different types of passive samples of high-temperature superconducting thin films to the 5-elec-

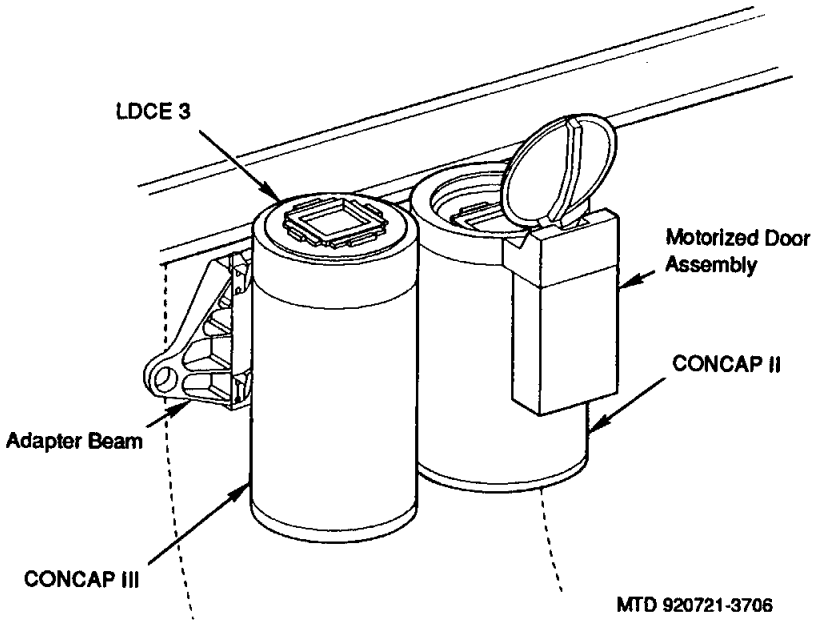

CONCAP II, CONCAP III/LDCE 3 Configuration

tron-volt atomic oxygen flux to achieve improved properties. A subset of the materials samples will be mounted on a plate and heated to 320°C (the highest temperature used in space) to study the absorption of oxygen as a function of temperature, while the material resistance change of 24 samples will also be measured on orbit.

The second CONCAP II experiment will expose the surface of different passive materials to hyperthermal oxygen flow at ambient and elevated temperatures. This experiment will enhance scientists' ability to predict materials degradation on spacecraft and solar power systems. In addition, the experiment will test oxidation-resistant coatings and the production of surfaces for commercial use, development of new materials based on energetic molecular beam processing, and development of an accurate data base on materials reaction rates in orbit.

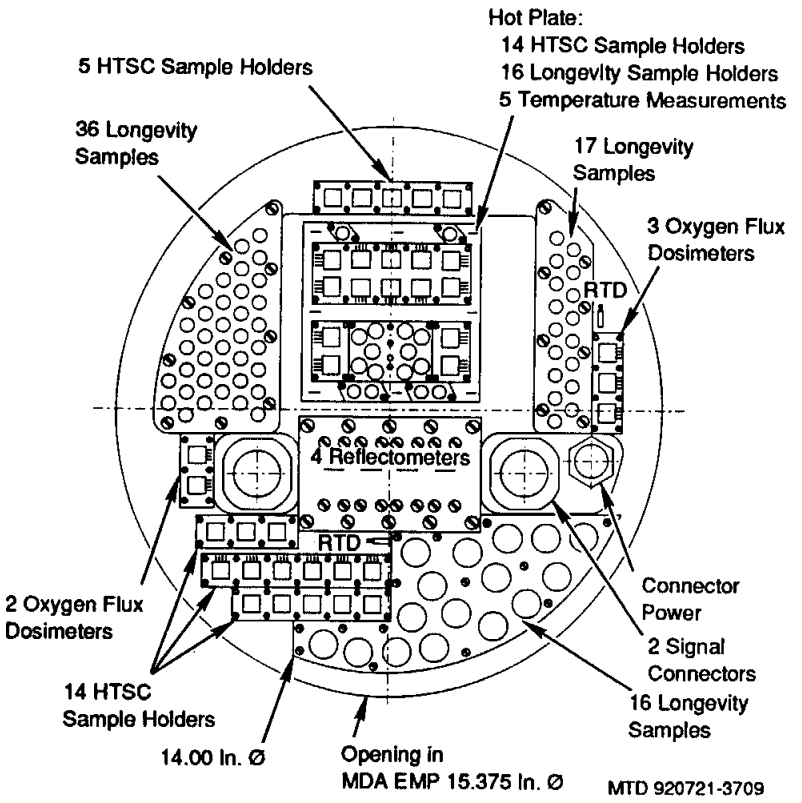

Accommodation of Sample Holders on Experiment Insert Plate, CONCAP II

CONCAP III will measure and record absolute accelerations (microgravity levels) in one experiment and electroplate pure nickel metal and record the conditions (temperature, voltage, and current) during this process in another experiment.

Items inside the orbiter experience changes in acceleration when various forces are applied to the orbiter, including thruster firing, crew motion, and, for STS-46, tethered satellite operations. CONCAP III is designed to determine if a low-gravity threshold exists for the observed phenomenon of gravity-induced structural alteration. Whether this threshold, if it exists, is as small as the

change in gravity levels resulting from the TSS-1 deployment will be determined. By measuring absolute accelerations, CONCAP III can compare the measured force that the orbiter undergoes during satellite operations with theoretical calculations.

The second CONCAP III experiment is an electroplating experiment using pure nickel metal. Materials electroplated in low gravity tend to have different structures than materials electroplated on Earth. Electroplating will be performed before and during the tethered satellite deployment to study the differences that occur for different levels of accelerations.

CONCAP III consists of an electrodeposition experiment system (EES), an acceleration measurement system (AMS), and a battery power supply. Identical electrodepositions will be accomplished under the two different acceleration conditions.

The EES consists of 32 identical electrodeposition cells mounted on two arrays of 16 cells with an experiment control computer for each array. Nickel metal will be deposited on cell cathodes from a nickel sulfate/nickel (II) chloride hexahydrate solution. The rate of nickel deposition will be controlled by varying the cathodic current intensity for each electrodeposition cell.

The AMS will measure the acceleration environment with two units: a three-axis unit and a single-sensor unit. It will be oriented in the canister so that its axis is parallel to the predicted direction of the deployed tether. To eliminate zero-bias calibration problems, the unit's orientation will be inverted through 180 degrees at frequent intervals.

The CONCAP payloads are managed and developed by the Corsortium for Materials Development in Space, a NASA Center for the Commercial Development of Space at the University of Alabama in Huntsville, and are sponsored by NASA's Office of Commercial Programs (OCP). Payload integration and flight hardware

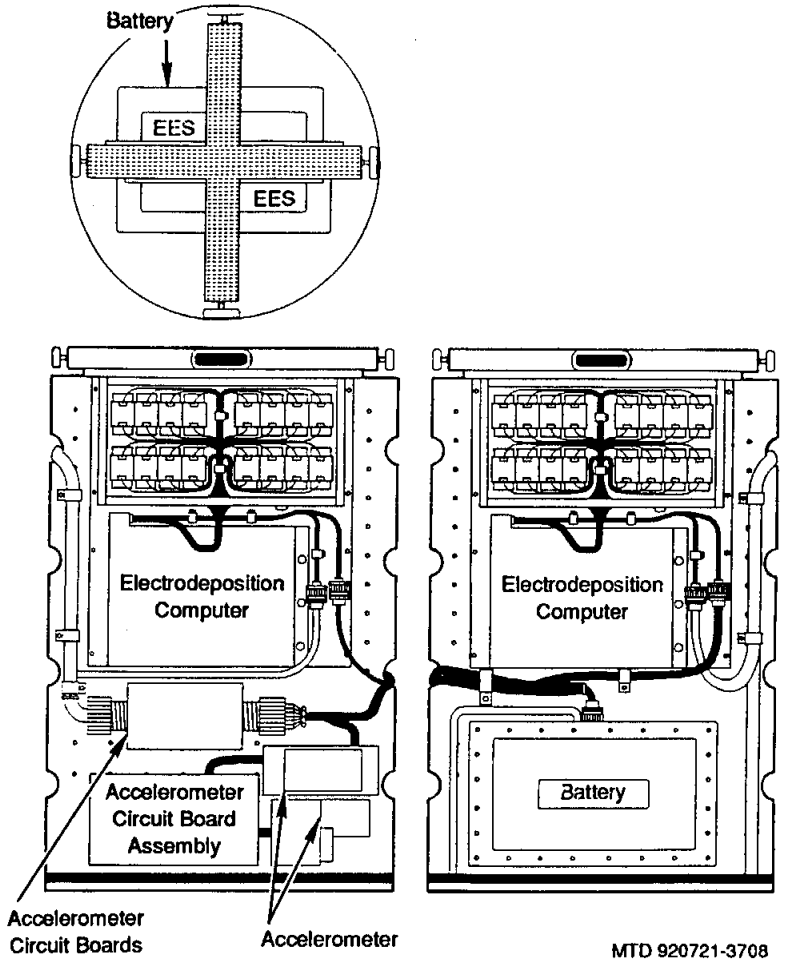

CONCAP III Equipment

management are handled by NASA's Goddard Space Flight Center, Greenbelt, Md.

Dr. John C. Gregory and Jan A. Bijvoet of UAH are the principal investigator and payload manager, respectively, for CONCAP II. Bijvoet is principal investigator for the CONCAP III acceleration

experiment, and the principal investigator for CONCAP III electrodeposition (electroplating) is Dr. Clyde Riley, also of UAH. CONCAP III payload manager is George W. Maybee of McDonnell Douglas Space Systems Co., Huntsville, Ala.

LDCE

The first of the Limited Duration Space Environment Candidate Materials Exposure payload series is sponsored by NASA's Office of Commercial Programs. The LDCE project on STS-46 represents an opportunity to evaluate candidate space structure materials in low Earth orbit.

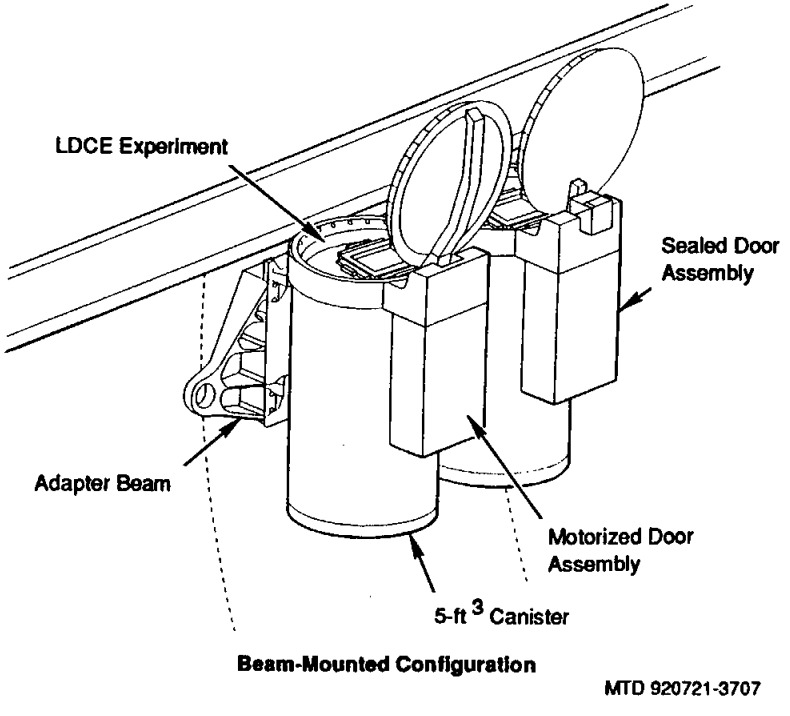

LDCE Configuration C

The objective of the project is to provide engineering and scientific information to those involved in materials selection and development for space systems and structures. By exposing such materials to representative space environments, an analytical model of the performance of these materials in a space environment can be obtained.

LDCE consists of three separate experiments: LDCE 1 and 2 (known as LDCE configuration C) and LDCE 3. Together, the LDCE experiments will examine the reaction of 356 candidate materials to at least 40 hours of exposure in low Earth orbit. LDCE 1 and 2 will be housed in standard 5-cubic-foot GAS canisters. LDCE 3 is a nonstandard passive experiment that will be located on the top of the GAS canister used for CONCAP III, using a supporting ring canister extension. Each experiment has a 19.65-inch-diameter support disc with a 15.34-inch-diameter section that contains the candidate materials. The disc facilitates the mounting of five different candidate space materials holders (low, moderate, and high density; thin film; and single sample holders). The support disc for LDCE 3 will be continually exposed during the mission, whereas LDCE 1 and 2 will be exposed only when the GAS canisters' doors are opened by a crew member. While the payload bay is facing the velocity vector (-ZVV), the LDCE door assemblies are commanded open to expose the candidate materials to the ambient oxygen atom flux. Other than opening and closing the doors, LDCE payload operations are completely passive. The doors will be opened once the shuttle achieves orbit and will be closed periodically during shuttle operations, such as water dumps, jet firings, and attitude changes.

The primary objective of these passive experiments is to introduce developmental composite materials to a flux of atomic oxygen atoms in low Earth orbit. The candidate materials—polymeric, coated polymeric, and light metallic composites—will have undergone extensive ground-based material performance testing prior to being attached to reusable test fixtures designed for multimission space shuttle use.

Two primary commercial goals of the flight project are to identify environmentally stable structural materials to support continued humanization and commercialization of the space frontier and to establish a technology base to service growing interest in space materials environmental stability.

The LDCE payload is managed and developed by the Center for Materials on Space Structures, a NASA Center for the Commercial Development of Space at Case Western Reserve University in Cleveland. Dr. John F. Wallace, director of Space Flight Programs at Case Western, is lead investigator. Dawn Davis, also of Case Western, is program manager.

PITUITARY GROWTH HORMONE CELL FUNCTION

The PHCF experiment is a middeck locker rodent cell culture experiment. It continues the study of the influence of microgravity on growth hormone secreted by cells isolated from the brain's anterior pituitary gland.

PHCF is designed to study whether the growth hormone-producing cells of the pituitary gland have an internal gravity sensor responsible for the decreased hormone release observed following space flight. This hormone plays an important role in muscle metabolism and immune-cell function as well as in the growth of children. Growth hormone production decreases with age. The decline is thought to play an important role in the aging process.

The decreased production of biologically active growth hormone seen during space flight could be a factor in the loss of muscle and bone strength and the decreased immune response observed in astronauts following space flight. If the two are linked, PHCF might identify mechanisms for providing countermeasures for astronauts on long space missions. It also may lead to increased understanding of the processes underlying human muscle degeneration as people age on Earth.

The PHCF experiment uses cultures of living rat pituitary cells. These preparations will be placed in 165 culture vials carried on the shuttle's middeck in an incubator. After the flight, the cells will be cultured and their growth hormone output measured.

Refrigerator/Incubator Module (R/IM)

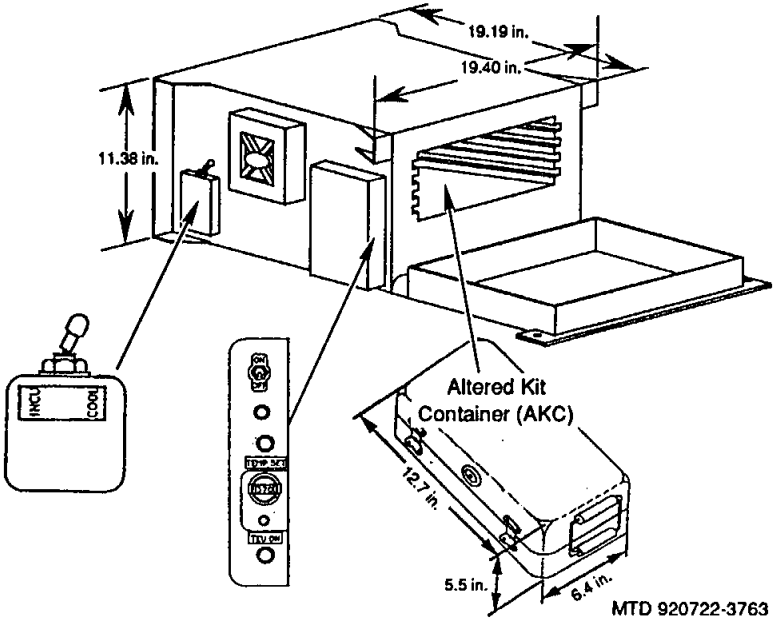

PHCF Configuration

IMAX CARGO BAY CAMERA (ICBC)

The IMAX project is a collaboration between NASA, the Smithsonian Institution's National Air and Space Museum, IMAX Systems Corp., and the Lockheed Corp. to document significant space activities and promote NASA's educational goals using the IMAX film medium. This system, developed by IMAX Systems Corp. of Toronto, Canada, uses specially designed 70mm cameras and projectors to record and display very high definition color motion pictures which, accompanied by six-channel high-fidelity sound, are displayed on screens that are up to ten times larger than a conventional screen, producing a feeling of "being there."

IMAX cameras have been flown on space shuttle missions STS 41-C, 41-D, 41-G, 29, 34, 32, 31, and 42 to document crew operations in the payload bay and the orbiter's middeck and flight deck as well as to film spectacular views of space and Earth. Film from those missions was used as the basis for the IMAX productions "The Dream Is Alive" and "The Blue Planet."

On STS 61-B, an IMAX camera mounted in the payload bay recorded extravehicular activities involving space construction demonstrations.

On its last mission, the STS-42 International Microgravity Laboratory-1 mission, the IMAX cameras were used to film activities in the Spacelab module and the crew compartment, emphasizing the space physiology experiments that have a bearing on future long-duration human presence in space.

The ICBC is a 70mm camera system designed for use in the orbiter payload bay. No generic pointing requirements, orbiter maneuvers, or specially staged crew activities are needed to support the main filming objectives of the ICBC. For STS-46, the main objectives are the deploy/retrieval of the tethered satellite system, deploy of EURECA, and any contingency extravehicular activity. ICBC's secondary objectives are to film Earth views that may require orbiter pointing if possible. Scene opportunities are provided to the crew both before the flight and in real time. The footage will be used in a new film dealing with our use of space to gain new knowledge of the universe and the future of mankind in space.

The ICBC is mounted on an extended adaptive payload carrier, which attaches to the starboard side of the forward payload bay sill longeron. The ICBC consists of two main structures: an insulated pressurized camera container and a mounting bracket. The camera container holds the camera, takeup and delivery reels, camera control electronics, and support hardware. It features a movable lens window cover. The mounting bracket connects the camera container to the GAS beam and orients the camera container for the proper camera field of view. Once mounted for a flight, the camera container position is fixed; no tilt or pan is possible. For STS-46, the container is tilted upward 30 degrees and panned inboard 25.5 degrees; it is mounted in bay 3 (starboard).

For STS-46, the delivery reel is loaded with 3,850 feet of film (nominally), enough for approximately 10-1/2 minutes of filming. The ICBC can also be loaded with a 2,200-foot film magazine. A single 30mm wide-angle lens is mounted on the camera; lenses and film cannot be changed during the flight.

The ICBC is controlled from the aft flight deck by the enhanced GAS autonomous payload controller (GAPC). The crew member can command the ICBC to turn main power on, go to a standby mode, adjust f-stop, and film a scene. By using the GAPC, the crew member can also determine the status of the camera, such as current f-stop and amount of film exposed. A tape recorder is also provided for crew documentation. All the GAS hardware, such as the GAS control decoders, status responder units, GAPCs, and the GAS signal and control cable, are owned, serviced, and certified by NASA's Goddard Space Flight Center.

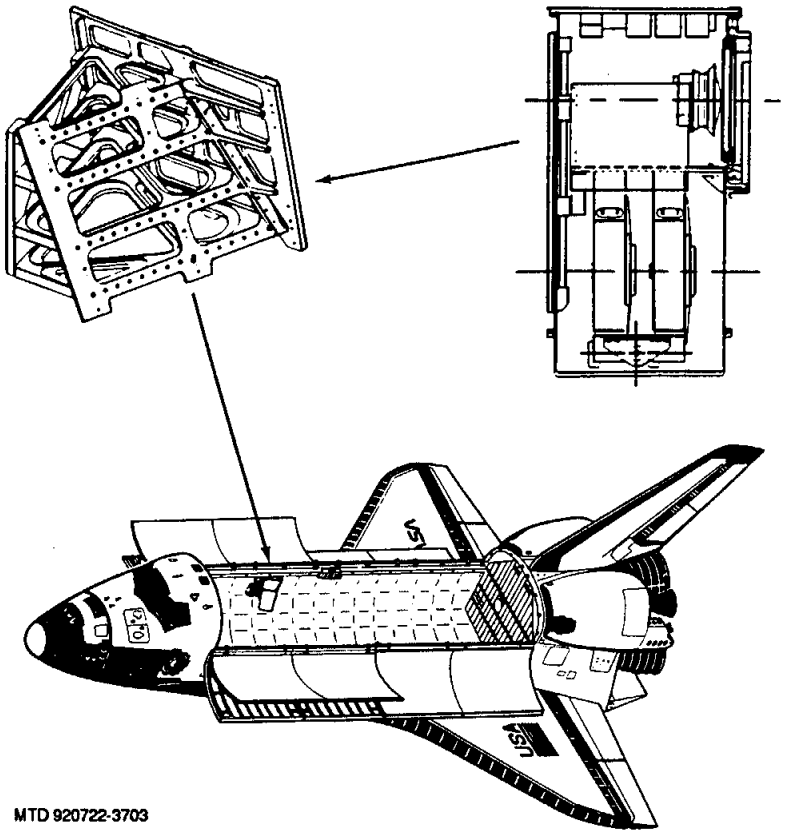

ICBC Flight Hardware Installation

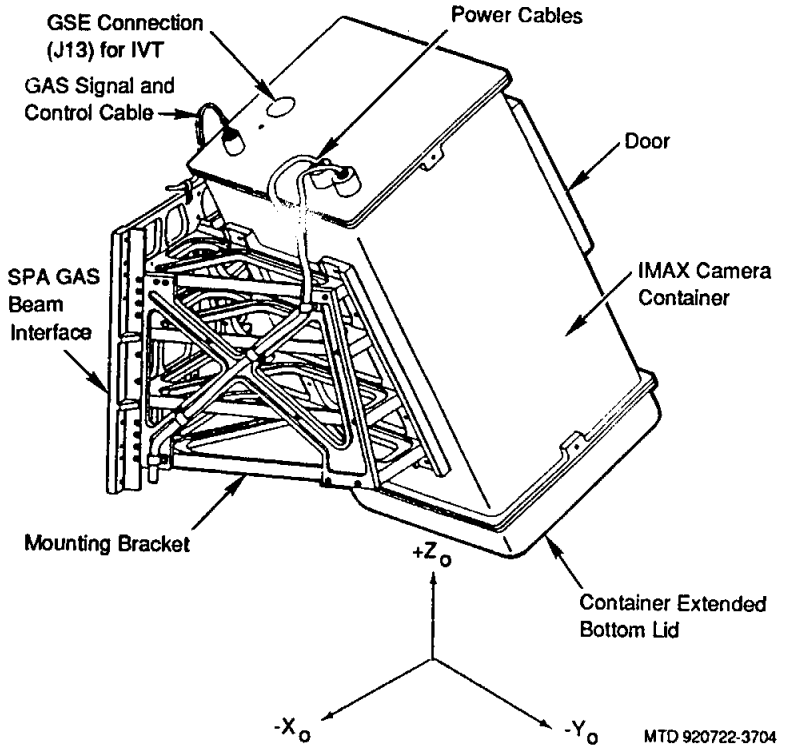

ICBC Mounted on GAS Beam Interface

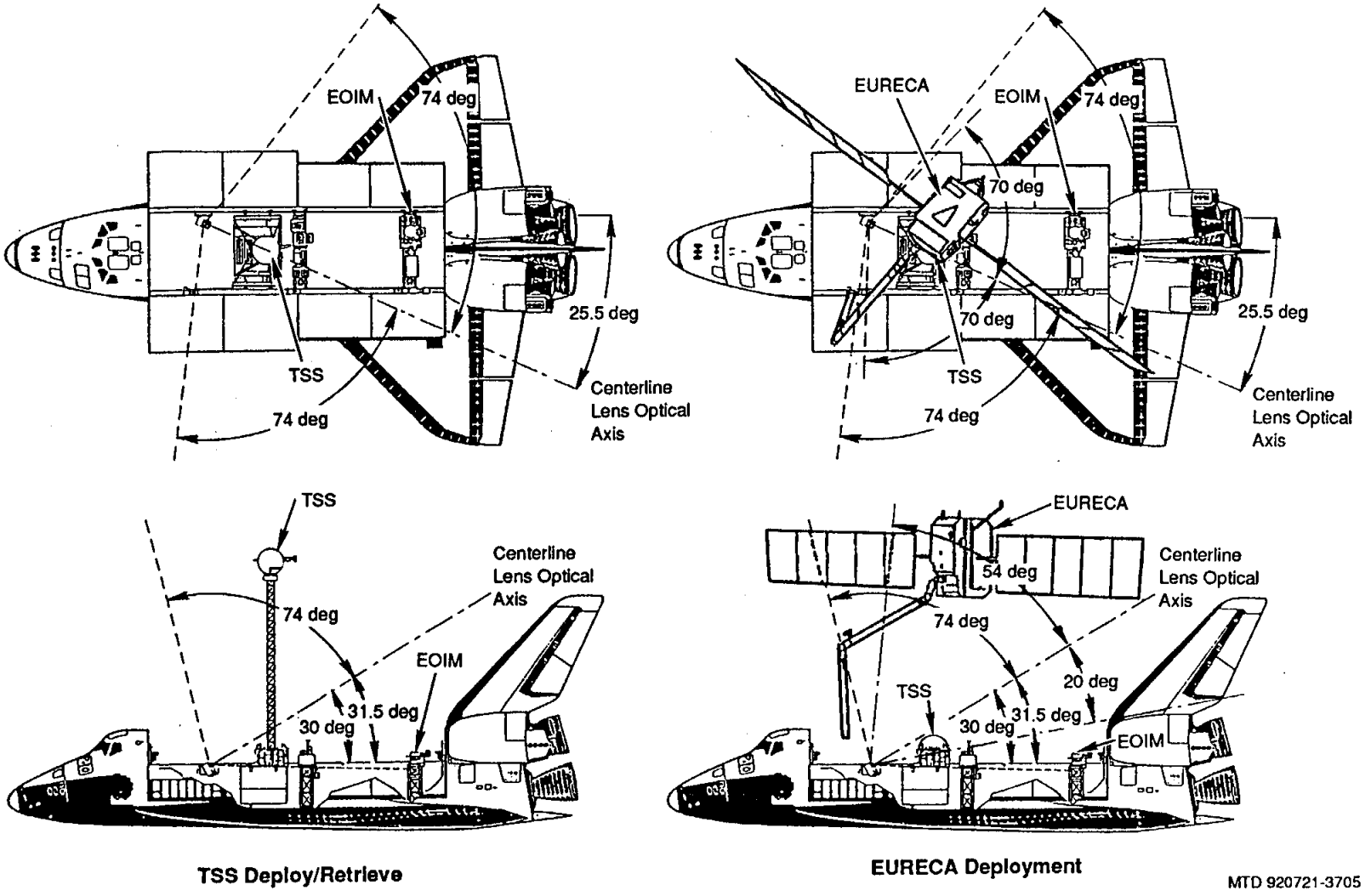

ICBC Position and Angle of View for STS-46 With Tethered Satellite System and EURECA

ULTRAVIOLET PLUME INSTRUMENT

The Ultraviolet Plume Instrument is located on the Low-Power Atmospheric Compensation Experiment satellite, a Strategic Defense Initiative Organization satellite in low Earth orbit at an inclination of 43 degrees and an altitude of approximately 290 nautical miles. The UVPI's sensors will be trained on the orbiter to obtain imagery and/or signature data to calibrate the sensors and to observe orbiter jet firings during cooperative encounters of the orbiter with the LACE satellite. Orbiter maneuvers will include, in order of priority, an OMS burn test, primary reaction control system burn test, vernier reaction control system burn test, orbiter hardbody, and payload bay lighting test.

UVPI is a payload of opportunity. A UVPI test will be scheduled late in the mission if an orbiter encounter with the satellite fits within the crew's scheduling constraints and the orbiter has enough propellant. UVPI requires no flight hardware to be carried on the orbiter.

UVPI is sponsored by the Strategic Defense Initiative Organization.

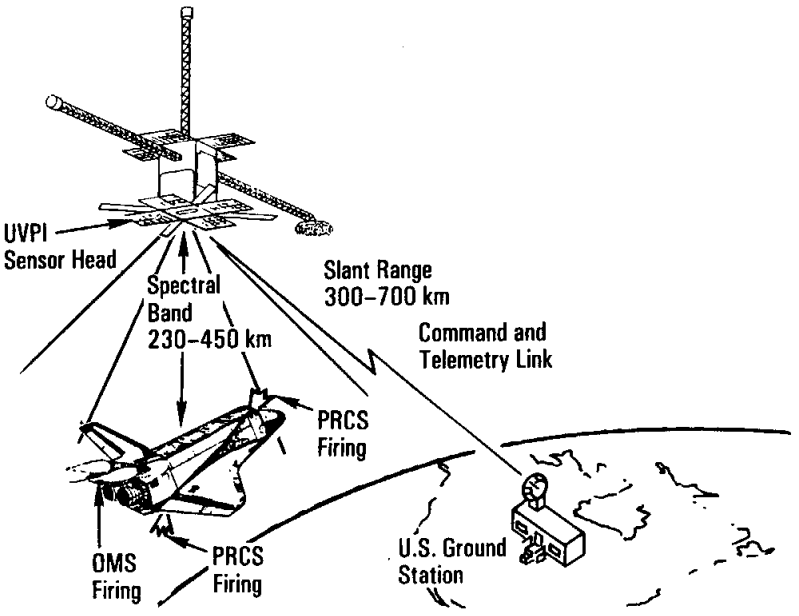

LACE/Shuttle UVPI Encounter

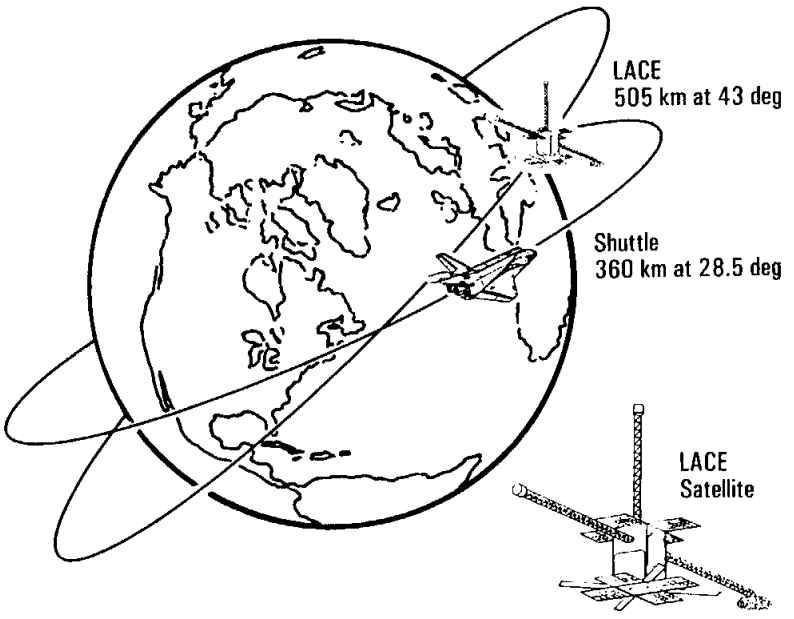

LACE (UVPI)/Shuttle Encounter

Entry aero control surfaces test—alternate elevon schedule, part 2 (DTO 251). The purpose of this DTO is to perform PTI maneuvers, and one body flap maneuver, during entry and TAEM to obtain aerodynamic response data for use to evaluate effectivity of aerodynamic control surfaces. Analysis may enhance vehicle performance and safety. This DTO uses the alternate forward elevon schedule and contains six parts.

Entry structural capability evaluation (DTO 307D). This DTO will collect structure load data for different payload weights and configurations to expand the data base of flight loads during entry.

Waste and supply water dumps (DTO 325). The objective of this DTO is to perform in-flight verification of new water dump nozzle performance.

Payload and general-purpose computer (PGSC) single-event upset monitoring (DTO 656). The purpose of this DTO is to determine payload and general support computer (PGSC) random access memory susceptibility to single-event upset caused by cosmic radiation. This data could lead to procedure changes and software or hardware changes that would reduce the effects of cosmic radiation on PGSC operations.

Acoustical noise dosimeter data (DTO 663). This DTO will gather baseline data on the time-averaged acoustical noise levels for the middeck (crew sleep station, airlock) and the module (location OH7) during daytime and nighttime operations using an audio dosimeter. Noise levels are a concern from a crew operations, performance, and health standpoint. Data is sought on middeck payloads, equipment/avionics, voice communications, within sleep stations, the new RCRS and the WCS. This data will provide information to help determine new specification levels for intermittent noises as well as a maximum 24-hour exposure level.

Modify ECLSS supply air ducting to provide chilled air to suited crew members (DTO 666). This DTO will evaluate hardware modifications that direct cool ARS supply air to the crew during the launch, entry, and landing orbital phases.

Laser range and range rate device (DTO 700-2). The purpose of this DTO is to demonstrate the capability to provide the orbiter flight crew with range and range rate data for rendezvous, proximity operations, and deploy operations using a hand-held device. This DTO will assess the usefulness of the data to assist the pilot in achieving the desired trajectory conditions.

Crosswind landing performance (DTO 805). This DTO will continue to gather data for a manually controlled landing with a crosswind.

Assessment of circadian shifting in astronauts by bright light (DSO 484). This DSO will determine the efficacy of bright light in facilitating preflight circadian shifting in astronauts requiring atypical work-rest cycles during space flight. A total of 12 crew members from varying flights are required. The activity is all scheduled for pre- and postflight periods. There is no in-flight activity.

Orthostatic function during entry, landing, and egress (DSO 603B). Heart rate and rhythm, blood pressure, cardiac output, and peripheral resistance of crew members will be monitored during entry, landing, seat egress, and orbiter egress in order to develop and assess countermeasures designed to improve orthostatic tolerance upon return to Earth. This data will be used to determine whether precautions and countermeasures are needed to protect crew members in the event of an emergency egress. It will also be used to determine the effectiveness of proposed in-flight countermeasures. Crew members will don equipment prior to donning the LES during deorbit preparation. Equipment consists of a blood pressure monitor, accelerometers, an impedance cardiograph, and transcranial Doppler hardware. The crew members wear the equipment and record verbal comments throughout entry.

Visual vestibular integration as a function of adaptation (investigation OI-1) (DSO 604). The objective of this DSO is to investigate visual vestibular and perceptual adaptive responses as a function of longer missions and to determine the operational impact on performance of entry, landing, and egress procedures. These data will be used to develop training and/or countermeasures to ensure the safety and success of extended missions by promoting optimal neurosensory function needed for entry, landing, and possible emergency egress.

Changes in the endocrine regulation of orthostatic tolerance following space flight (DSO 613). This DSO will characterize the extent and pattern of changes in plasma volume during space flights of up to 16 days. It will also determine whether resting levels of catecholamines (hormones such as adrenalin that provide a surge of energy to cope with emergency situations) are elevated immediately after flight and whether catecholamine release in response to varying degrees of orthostatic and cardiovascular stresses is impaired after space flight. There are no on-orbit activities for this DSO.

The effect of prolonged space flight on head and gaze stability during locomotion (DSO 614). The purpose of this DSO is to characterize preflight and postflight head and body movement along with gaze stability during walking, running, and jumping, all of which are relevant to egress from the shuttle. Changes in these parameters due to the microgravity environment could impair a crew member's ability to perform an emergency egress from the vehicle. There are no on-orbit activities for this DSO.

Effects of intense exercise during space flight on aerobic capacity and orthostatic function (DSO 618). The purpose of this DSO is to evaluate the effects of cycle ergometer exercise 18 to 24 hours before landing with similar exercise performed immediately after the flight to quantify deconditioning that occurs over the duration of the flight and to compare preflight, in-flight, and postflight heart rate responses to cycle ergometry.

In-flight use of Florinef to improve orthostatic intolerance after flight (DSO 621). The purpose of this DSO is to evaluate the efficacy of mineralocorticoid, commonly known as Florinef, to enhance postflight orthostatic capacity as determined by heart rate, blood pressure, stroke volume, and other cardiovascular responses to orthostatic stress. Florinef, a plasma expander, has been effective in restoring or maintaining plasma volume and orthostatic toler-

ances during postbedrest tests. A cardiovascular profile will be determined both before and after flight for the participating crew member.

Educational activities (DSO 802). The objective of this DSO is to produce an educational video product with scenes recorded on orbit and on the ground. The crew will film several scenes on orbit using the camcorder. On STS-46, the crew will perform demonstrations of space physics (tether dynamics, electrodynamics, forces, etc.) and tethered satellite properties. They will also discuss the TSS-1 mission objectives and the EURECA mission.

Documentary television (DSO 901). This purpose of DSO 901 is to provide live television transmission or VTR dumps of crew activities and spacecraft functions that include payload bay views, STS and payload bay activities, VTR downlink of crew activities, in-flight crew press conference, and unscheduled TV activities.

Documentary motion picture photography (DSO 902). This DSO requires documentary and public affairs motion picture photography of significant activities that best depict the basic capabilities of the space shuttle and key flight objectives. This photography provides a historical record of the flight as well as material for release to the news media, to independent publishers, and film producers.

Documentary still photography (DSO 903). This DSO requires still photography of crew activities in the orbiter, spacecraft functions, accommodations, and mission-related scenes of general public and historical record of the flight and documentation of the flight for public release after flight.